Syncro ASM

Analogue Addressable Marine Fire Control Panel

Product Manual

Man-1096M Issue 18 June 2018

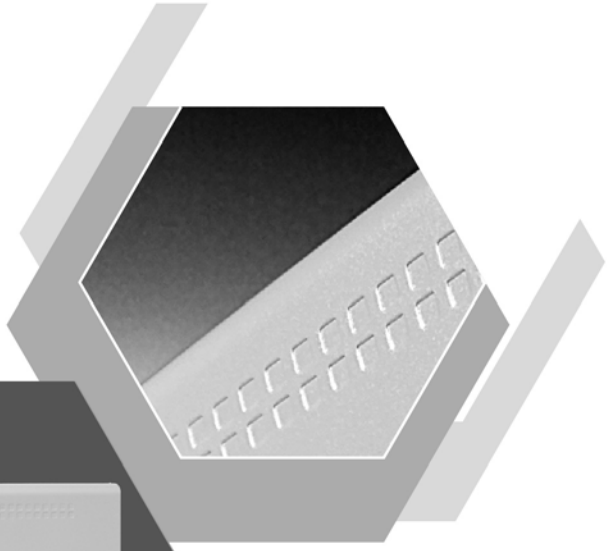

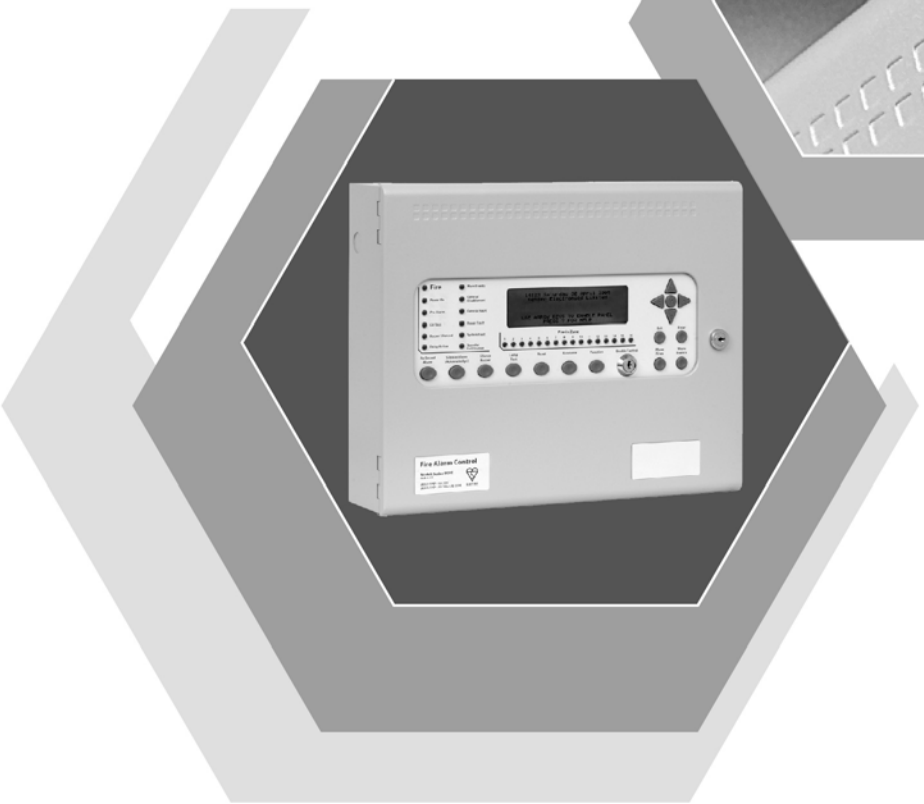

1. INTRODUCTION 5

2. SAFETY 6

3. TECHNICAL SPECIFICATION 6

4. INSTALLATION 7

5. CABLING 8

5.1 CABLE TERMINATION 8

6. CONNECTING TO THE PANEL 9

7. FRONT PANEL CONTROLS 10

8. POWERING THE PANEL 11

8.1 CONFIGURATION DATA - WRITE ENABLE SWITCH 11
8.2 CONFIGURING THE PANEL (AUTOLEARN) 12
8.3 CONFIGURING THE PANEL (FROM PC) 13

9. FACILITIES MENUS 14

10. DETECTION CIRCUITS 14

10.1 FITTING ADDITIONAL DETECTION CIRCUIT (LOOP CARD) 15

11. LOOP SOUNDERS & BEACONS 15

11.1 APOLLO 16
11.3 HOCHIKI 16
11.3.1 Hochiki sounder Tone Settings 16

12. PANEL SOUNDER CIRCUITS 17

12.1 STAGE ONE AND STAGE TWO DELAYS 17

13. SOUNDER CONTROLLERS 17

14. RELAYS 17

15. REMOTE CONTROL INPUTS 19

16. REMOTE I/O SERIAL BUS 19

16.1 16 CHANNEL I/O BOARD 20
16.2 8 WAY RELAY BOARD 20
16.3 6 WAY SOUNDER BOARD 20
16.4 4 WAY ZONE BOARD 20
16.5 SYNCRO VIEW REPEATER UNIT 20

17. POWER SUPPLY 21

17.1 AUX. 24V SUPPLY 21
17.2 24V OUT TERMINALS 21
17.3 REMOTE PSU 21
17.4 BATTERY CAPACITY 21

18. PROGRAMMING VIA A PC 22

18.1 PANEL SETTINGS 22
18.1.1. Panel name 22

18.1.2. Panel address ... *22*
18.1.3. Protocol ... *22*
18.1.4. Number of loops ... *22*
18.1.5. Default ringing mode ... *23*
18.1.5.1 – Marine Mode ... *23*
18.1.6. Access level code changes ... *23*
18.1.7. CHQ-BS Loop Sounders ... *23*
18.1.8. Panel text ... *23*
18.1.9. Panel Modem Fitted ... *23*
18.1.10. Graphics System ... *23*
18.1.11 – Loop Offset ... *23*
18.1.12 – Apollo Intrinsically Safe Devices ... *23*
18.1.13 – Zone Indicators ... *23*
18.1.14 – Display Invert ... *24*
18.1.15 – Any 2 devices to bypass delays – Def Ring Mode outputs only ... *24*
18.1.16 – Resound for fire in same zone ... *24*
18.1.17 – Resound for fire in other zone ... *24*
18.1.18 – Hide Disablement Event for active delays ... *24*
18.1.19 – Delays active on initialisation ... *24*
18.1.20 – Ignore Global C&E Disablement ... *24*
18.1.21. Day/Night times ... *24*
18.1.22. Calibration time ... *24*
18.1.23 Network Interface ... *24*
18.1.24 Loop Sounder Options ... *25*
18.2. INPUTS ... 25
18.2.1. Fire action ... *26*
18.2.2. Fault action ... *26*
18.2.3. Pre-alarm action ... *26*
18.2.4. Tech. alarm action (Technical alarm) ... *26*
18.2.5. Evacuate action ... *26*
18.2.6. Alert action ... *26*
18.2.7. Security action ... *26*
18.2.8. Silence alarm action ... *26*
18.2.9. Reset action ... *27*
18.2.10. Transparent action ... *27*
18.2.11. Disablement action ... *27*
18.2.12. Test mode action ... *27*
18.3. OUTPUTS ... 27
18.3.1. Evacuate Output ... *27*
18.3.2. Def Ring Mode ... *28*
18.3.3. Silenceable ... *28*
18.3.4. Alert ... *28*
18.3.5. Stage one delay ... *28*
18.3.6. Stage two delay ... *28*
18.3.7. Zoning ... *28*
18.3.8. Location text ... *28*
18.3.9. Tech alarm ... *28*
18.3.10. Pre-alarm ... *28*

19. CAUSE AND EFFECT PROGRAMMING ... 28

20. NETWORKING ... 30

21. PANEL SETTINGS ... 31

21.1. CONTRAST ADJUST ... 31
21.2. NETWORK ADDRESS SETTING ... 31

22. PANEL SPECIFICATION SUMMARY ... 32

22.1. RECOMMENDED CABLES 32
22.2. SOUNDER LOAD 32
22.3. CURRENT CONSUMPTION 32
22.4. POWER SUPPLY – 32
22.5. FIELD DEVICES 32
22.6 FIRE / ALARM / FAULT RELAY RATINGS (SEE ALSO SECTION 13) 32
22.7 ZONES 32
22.8 NETWORKING 32
22.9 REMOTE CONTROL INPUTS (SEE ALSO SECTION 16) 33
22.10 AUXILIARY 24 VOLT MONITORED OUTPUT (SEE ALSO SECTION 18.1) 33
22.11 FUSE RATINGS 33

23. ADDITIONAL FEATURES 33

23.1. LOOP DATA TEST 33
23.2. NETWORK PANEL MENU CONTROL 33
23.2.1. Network Disablements 33
23.2.2. View Device Details on other panels 34
23.2.3. Global System Time 34
23.3. CONFIGURATION TRANSFER OVER NETWORK 34
23.4. CONTAMINATION STATUS 34
23.5. ANALOGUE VALUE TRANSFER 34

APPENDIX A – EN54 CONFIGURATION REQUIREMENTS 35

SECTION 7 – FIRE ALARM CONDITION 35
Section 7.1.4 35
Section 7.2.c / 7.4 / 8.2.1.c / 8.6 35
Section 7.6.1 35
Section 7.8 35
Section 7.9 35
Section 7.11 35
Section 7.11.a 35
Section 7.11.d 35
SECTION 8 – FAULT WARNING CONDITION 35
Section 8.2.4.c 35
Section 8.8 35
SECTION 9 – DISABLED CONDITION 35
Section 9.1.2 35
Section 9.1.4 35
SECTION 10 – TEST CONDITION 36
Section 10.1.b 36
SECTION 12.5 – INTEGRITY OF TRANSMISSION PATHS 36
Section 12.5.2 36
Section 12.6 – Accessibility of indications and controls 36
Section 12.6.6 36

APPENDIX B – IMO FSS CODE CONFIGURATION REQUIREMENTS 36

1. Introduction

The **Syncro ASM** is an analogue addressable fire detection and alarm control panel with 16 zonal LED indicators and is available in models with either 1 or 2 detection loops. It can support up to 126 devices for Apollo protocol, up to 127 devices for Hochiki ESP protocol per loop driver.

Syncro ASM also supports loop-powered sounders, call points and I/O modules for all three of the aforementioned protocols.

Any number of devices can be allocated to any zone ensuring that any system configuration can be easily accommodated.

To ensure that the system is installed and commissioned with the minimum of trouble, it should be carefully planned before the installation is begun.

This involves allocating an address to each device and allocating a message of up to 40 characters (including spaces) to each address to assist in the location of the devices.

Devices should then be grouped into zones in accordance with the appropriate fire detection systems design standard and building plans.

The control panel can be configured using the switches on the front as described in the menu descriptions at the back of this manual or more comprehensively, using the Loop Explorer PC configuration utility and download lead which is available as a separate item.

The **Syncro ASM** control panel offers an extensive list of features and options for the control and monitoring of plant, equipment and sounders, which can be, configured via the Loop Explorer PC configuration programme or the front panel controls.

In addition to the EN54-2 options with requirements below, the panel also supports facilities such as Day/Night sensitivity changes and cause & effect configuration to enable more comprehensive systems to be implemented.

The range of compatible devices includes optical and ionisation smoke sensors, heat sensors, multi-sensors, switch monitors, sounders, relay modules and bell controllers. Interfaces to conventional detection systems can also be catered for using zone-monitoring devices.

Each loop offers an addressing range from 1 to 127 (Hochiki) or 1 - 126 (Apollo). Devices such as the switch monitors and bell controllers have “Sub-addresses” in addition to their main address. Each panel can be configured to recognise up to 800 sub-addresses.

A switch monitor for example, may have a main address of 123, input 1 sub-address 123.1 and input 2 sub-address 123.2. (Three addresses from 800 available).

The sub-addresses can be treated as if they were individual addresses i.e. each can be allocated to any zone, given an individual address message and be operated on by different cause and effect tables.

Although unlikely to be exceeded, the maximum number of sub-addresses available should be taken into consideration when designing systems that contain large numbers of I/O units.

Important: This control panel should be used only with compatible fire system components. I.e. Apollo XP95/ Discovery Protocol, Hochiki ESP Protocol.

The control panel has the following options with requirements as defined in BS EN54-2: 1997.

1) Fault signals from points (clause 8.3)
2) Delay of the actioning of inputs and outputs (clause 7.11)
3) Disablement of each address point (clause 9.5)
4) Test condition (clause 10.1 to 10.3)
5) Control of Fire alarm devices (clause 7.8)
6) Co-incidence detection (clause 7.12)

2. Safety

Suppliers of articles for use at work are required under section 6 of the Health and Safety at Work act 1974 to ensure as reasonably as is practical that the article will be safe and without risk to health when properly used.

An article is not regarded as properly used if it is used 'without regard to any relevant information or advice' relating to its use made available by the supplier.
This product should be installed, commissioned and maintained by trained service personnel in accordance with the following:
(i) IEE regulations for electrical equipment in buildings
(ii) Codes of practice
(iii) Statutory requirements
(iv) Any instructions specifically advised by the manufacturer

According to the provisions of the Act you are therefore requested to take such steps as are necessary to ensure that you make any appropriate information about this product available to anyone concerned with its use
This equipment is designed to operate from 230V 50Hz mains supplies and is of class 1 construction. As such it **must** be connected to a protective earthing conductor in the fixed wiring of the installation. A readily accessible double pole disconnect device with a disconnect air gap of at least 3mm and conforming to EN 60950, shall be incorporated in the fixed wiring.
Failure to ensure that all conductive accessible parts of this equipment are adequately bonded to the protective earth will render the equipment unsafe.

3. Technical specification

Overall size	385mm x 310mm x 90mm
Finish	BS 00 A 05 mid grey fine texture
Mains supply	230V AC, 50Hz +10% -15% (100 Watts maximum)
Mains supply fuse	1.6Amp (F1.6A L250V)
Power supply rating Imax a	400 milliamps
Power supply rating Imax b	2.3 Amps
Operating voltage	18 to 30 volts DC
Battery charging circuit impedance Rimax	1.35R
Minimum output current for correct operation Imin	130 milliamps
Maximum ripple voltage	1.5+/- 0.3 Volts
Battery type	Yuasa NP 7Ah Flame retardant UL94:V-0
Battery charge voltage	27.6V DC nominal (temperature compensated)
Battery charge current	0.7A
Battery fuse	20mm 3.15A glass
Maximum current draw from batteries	3 Amps
Aux 24V output rating	300 milliamps maximum load (fused at 500 milliamps)
Aux 24V output voltage	16 to 30V DC *(Min 16V @ Final Voltage)*
Final voltage	19V±1V
Sounder output rating (two outputs)	Each rated at 1A
Relay contacts	30V DC, 1 Amp maximum
Detection loop current	400 milliamps maximum

4. Installation

Installation of the panel should be carried out by qualified personnel only. The electronic components within the panel are vulnerable to physical damage and damage by electrostatic discharges.

It is advisable to wear a wrist strap designed to prevent the build-up of static charges within the body, before handling any electronic circuit boards.

Never insert or remove boards or components with the power on.

Mounting the Cabinet

The site chosen for the location of the panel should be clean and dry and not subject to shock or vibration. The temperature should be in the range -5° to +35° C, the humidity should not exceed 95%.

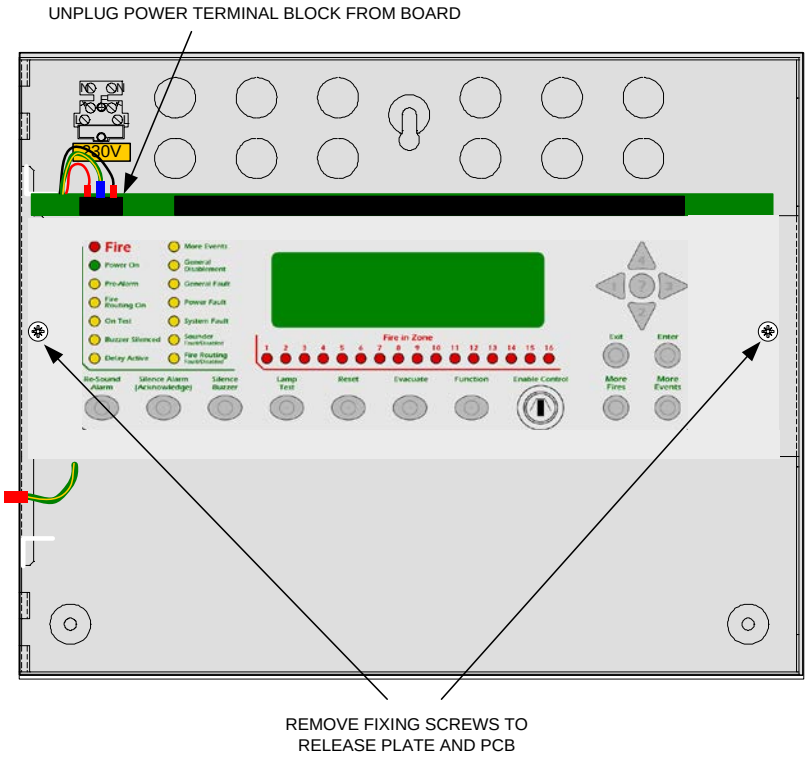

Open the outer cover using the key provided. Unplug the power terminal block from the left hand side of the circuit board, remove the two screws holding the plate in position and then remove the complete circuit board and plate.

Hold the assembly by gripping the metal plate only and try to avoid touching the circuit board.

Place the plate/circuit board assembly and fixing screws in a safe location to prevent accidental damage.

The outer cover can be removed to make fitting more manageable by removing the two pins holding it in position on the left hand side.

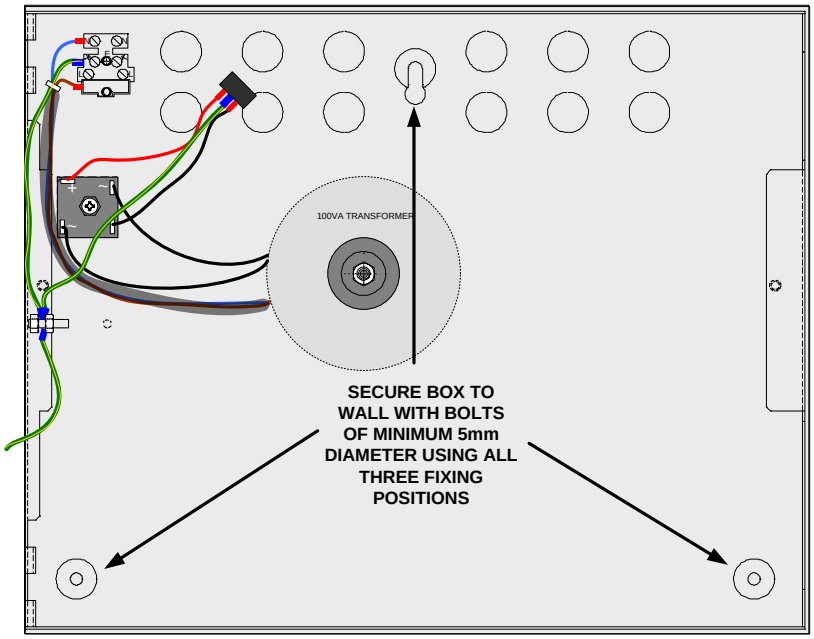

Remove knockouts from the top and or back of the box in the positions at which cables will enter.

Using the box as a template, mark the position of the top fixing hole, ensuring that the wall is flat at the chosen location. The top fixing is a keyhole slot and fitting a screw here and hanging the box first will assist in marking the remaining fixing points.

Screws or bolts of a minimum of 5mm diameter and 40mm long must be used to mount the enclosure in all three mounting positions.

After the box is firmly fixed, remove any knockout blanks and dust or swarf caused by drilling and fixing the box.

5. Cabling

It is advisable to fit cable glands and cables before re-fitting the outer cover and plate/circuit board assembly.
Cables should be brought into the cabinet using the knockouts provided and where necessary, using couplers to maximise the space within the enclosure. Use the knockouts closest to the terminating position for each cable, to ensure cable length within the enclosure is kept to a minimum.

Ensure that only the numbers of knockouts are removed to meet the cable termination requirements, as any additional apertures in the enclosure will compromise the IP30 ingress protection requirements required by EN54-2.

Brass inlet bushings or cable glands should be used to maintain insulation and to ensure EMC compliance to the requirements of EN54-2.

The screen or drain wires should be bonded to earth via metal cable glands.

The maximum size of cable, which can be terminated, is 2.5^2 mm.

The communications protocols are highly immune to noise but sensible segregation from known noise generating sources such as mains cables is recommended.

Detection circuit cable size and type is dependant on the number and type of devices used and should be calculated for each installation. Cable length calculators are available for both Hochiki ESP and Apollo protocols.

Cabling for sounder circuits should be sized according to sounder load and cable length but $1.5mm^2$ should suffice in the majority of cases.

The control panel requires a 230V AC supply, which should be derived from a separate fused spur, labelled "**Fire Alarm - Do Not Switch Off**".

The mains supply must include an earth conductor connected to the fixed installation earthing system of the building.

This equipment relies on the building installation for protection and requires a 5-amp protection device. The mains supply should use cable with a minimum cross section of $1.5mm^2$.

5.1 Cable Termination

Drain wires need to be terminated at the brass cable gland to ensure EMC compliance to the requirements of EN54-2.

To ensure good earth bonding at entry to the panel enclosure, it is recommended that the cable drain wires are terminated using Pirelli AXT brass cable glands. These glands have a slotted fixing thread, which allows the drain wire to be clamped between the gland fixing nut and panel enclosure. To ensure that a good earth bonding between the drain wire and panel case, a 20mm shakeproof washer should be used, as shown in the termination diagram below.

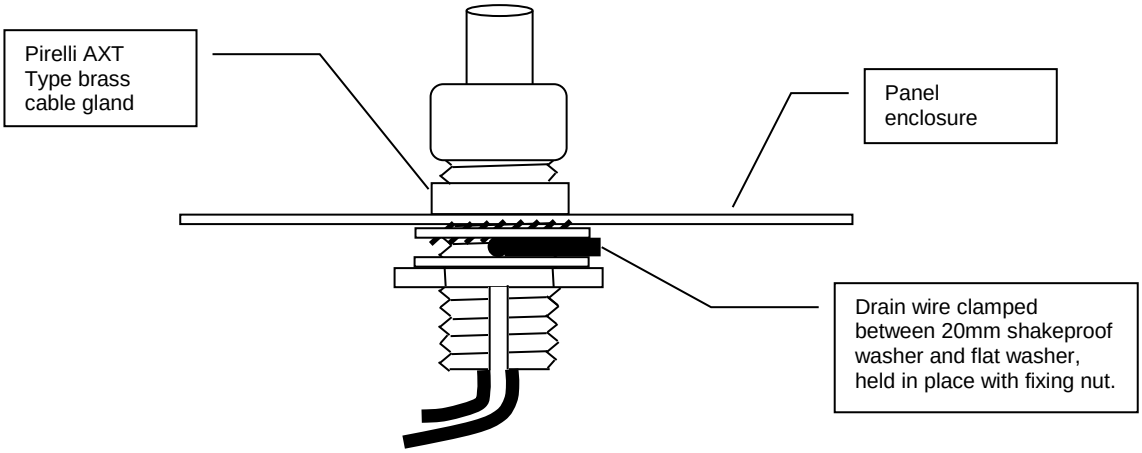

6. Connecting to the panel

All connections to the panel are via 5mm pitch, 2.5mm^2 capacity, spring leaf terminal blocks. Care should be taken to use the correct sized terminal screwdriver and not to over tighten the terminals.

If stranded cables are used then care should be taken to ensure that all strands are contained in the terminal and that there are not any loose strands which may cause short circuits to other terminals or cables.

The mains connection should enter the enclosure via a knockout as near to the mains terminal block as possible and should be segregated from all other wiring. Mains connection cables should be kept short and be secured together with a cable tie near the mains terminal block to minimise the danger of them shorting to other parts of the equipment if they become disconnected.

The mains terminal block contains a F1.6A L250V fuse and must be replaced only with a fuse of the same type.

The diagram below shows the recommended cable routing for connections to the panel. The diagram shows the rear cable entry points used. If top cable entry points are used then a similar arrangement should be employed.

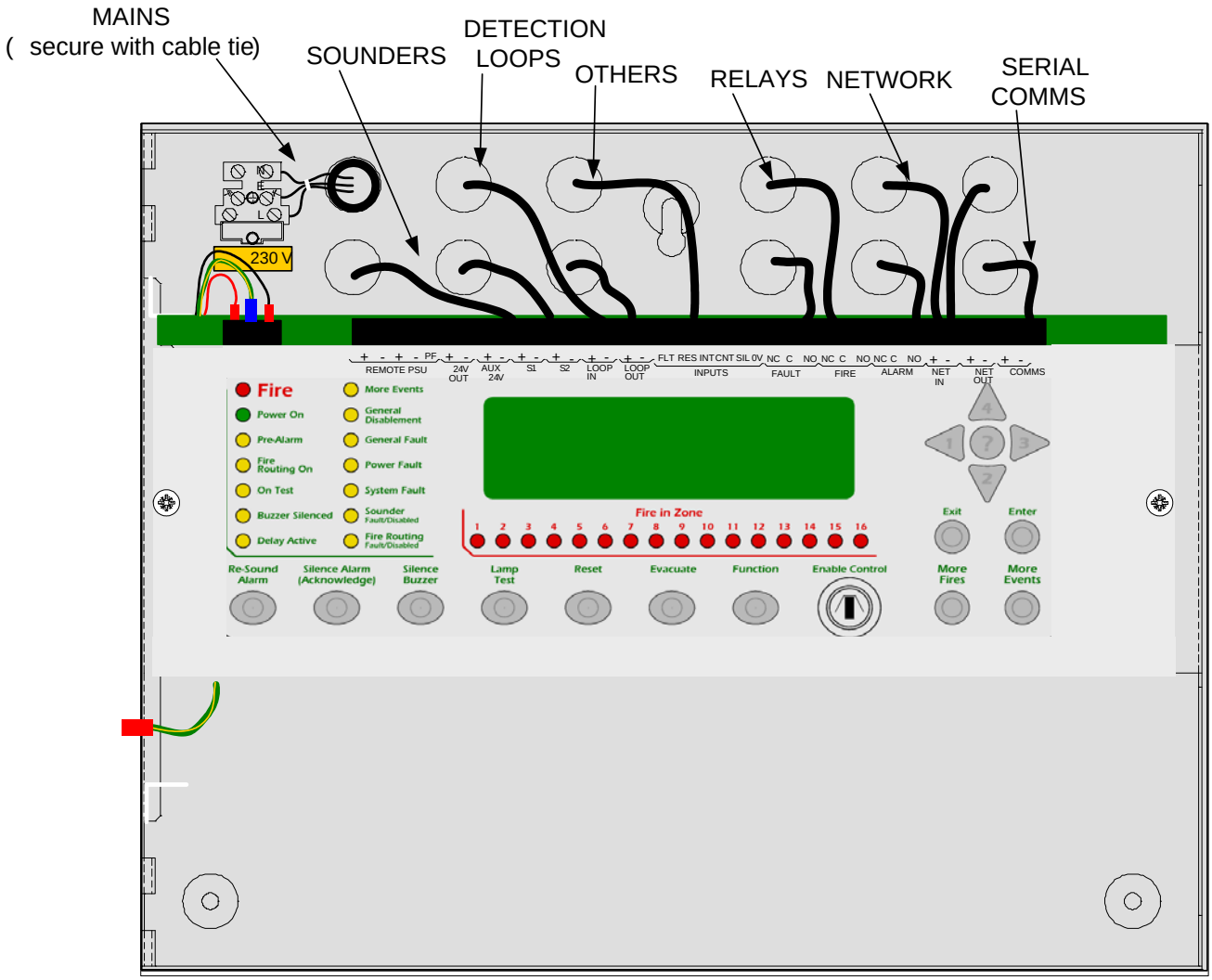

To avoid the possibility of a confusing array of fault conditions, it is best to connect the system gradually so that faults can be cleared on one circuit before connecting another.

Polarity must be observed carefully on any terminals with + or - markings and end of line devices must be fitted to all circuits which connect to terminals that have had the supplied, end of line devices removed.

All wiring should be checked carefully before applying power to the control panel.

Do not connect or disconnect wiring with the power on.

7. Front panel controls

The front panel contains controls for operating and programming the panel.

The lamp test and silence buzzer buttons can be operated at any time. (Access level 1)

The More Fires and More Events buttons can be operated at any time when there are more events than can be displayed on the screen. (Access level 1).

The menu navigation buttons (1, 2, 3 and 4) can be used to enter the password to Access level 2 (2222) which then enables the Silence Alarm (Acknowledge), Re-sound Alarm, Reset, Evacuate and Function buttons. This also gives the user access to the Access level 2 menu facilities such as disabling and testing parts of the system.

Access level 2 can also be entered by operation of the Enable control keyswitch on models that have this switch fitted.

The internal panel buzzer will “beep” whenever a button is pressed.

The Help (?) button offers additional information relating to the current status of the control panel. For example, if the panel is in an alarm or fault condition then advice on the recommended action will be displayed when the ? button is pressed or if a menu function is being accessed then help relating to that function will be displayed when the ? button is pressed.

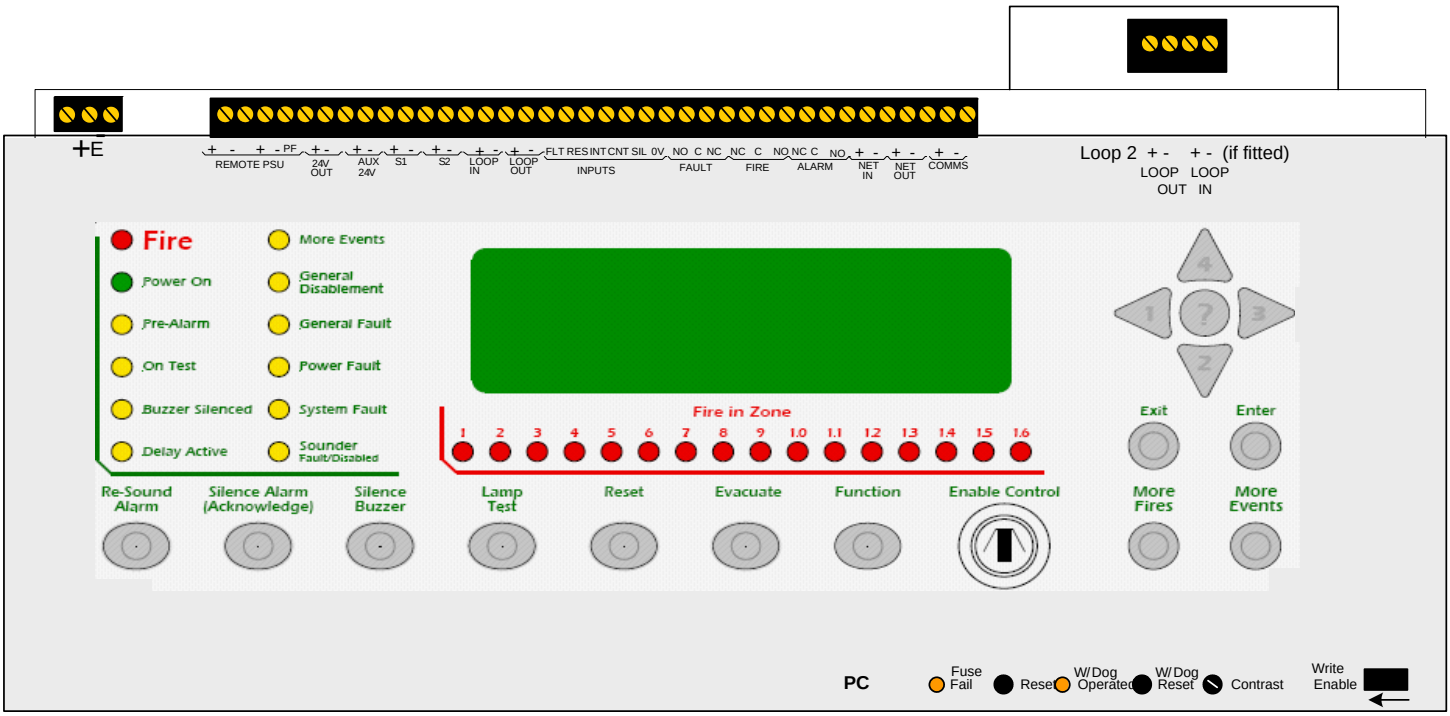

With the lid of the control open, more controls are revealed. These controls are strictly for service personnel and should not be operated by the user under any circumstances. Opening the front cover also gives access to the PC connection port for programming.

If the processor stops running or re-boots for any reason, the watchdog indicator (W/Dog Operated) will illuminate as a record of this event. This indicator can only be reset by operating the watchdog reset switch (W/Dog Reset).

It is necessary under some circumstances (after a firmware upgrade for instance) to re-start the processors in the panel. A reset switch is provided for this purpose labelled Reset.

A display contrast adjust control is provided which can be adjusted to suit the lighting conditions or position of the installed panel. This is a rotary control and can be adjusted with a small terminal screwdriver.

In order to change the configuration of the control panel, the configuration memory must be enabled. This is done by switching the Write Enable slide switch from its normal, right hand position, to the left as indicated by the arrow beneath it.

A warning is displayed on the LCD when the write enable switch is in the enabled position to prevent it from being inadvertently being left in this position. This warning can be reset after the switch has been returned to its normal position by pressing the front panel Reset button. If not reset the warning will time out a short while after the Write Enable switch is returned to the right hand position.

All of the access level 3 controls are recessed to avoid accidental operation but all can be accessed using a small, terminal screwdriver or similar tool.

8. Powering the Panel

Never connect batteries before applying mains power first.

Ensure that the panel is free from swarf, wire ends, knockout blanks and any other debris

Ensure that all cable connections to loops, sounder circuits and other inputs or outputs being used are correct and that the wiring is formed tidily away from the surface of the circuit board before applying power.

The panel requires two 12V 7Ah sealed lead acid batteries. The batteries should be placed in the bottom of the box with the terminals facing up and facing each other.

Batteries can be dangerous. Do not short the battery terminals to the enclosure or mounting plate. The polarity of the battery connection should be checked carefully before proceeding.

Connect the batteries together first by fitting the battery link to the battery terminals nearest the back of the enclosure.

Connect the red battery lead to the terminal of the left hand battery nearest the front of the enclosure and the black battery lead to the terminal of the right hand battery nearest the front of the enclosure.

The supply from the battery is protected by a 3.15A, 20mm glass fuse which will rupture if excessive current is demanded from the battery by the control panel. This fuse is labelled F4 and is located on the underside of the circuit board.

To replace the battery fuse, the power should be removed from the panel and the plate removed as described in section 3. The fuse must be replaced with one of the same type.

Never connect batteries before applying mains power first.

Battery connection viewed from above

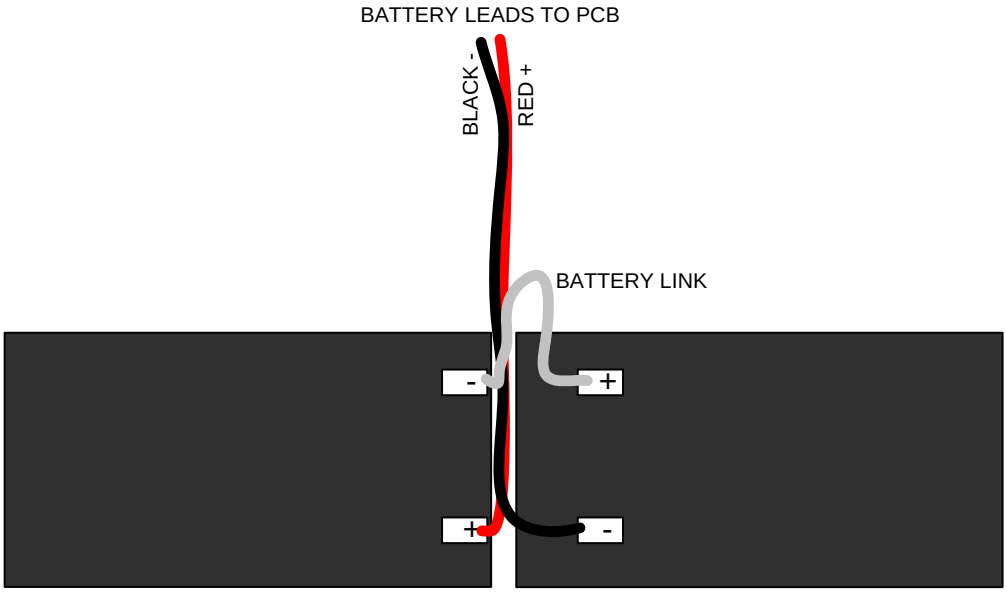

Caution:
RISK OF EXPLOSION IF BATTERY IS REPLACED BY AN INCORRECT TYPE. DISPOSE OF USED BATTERIES ACCORDING TO THE INSTRUCTIONS

Once all power connections are correctly made and power is applied, the panel is ready to start.

8.1 Configuration Data - Write Enable Switch

Panels have a memory “Write Enable” switch fitted. This switch is used to physically prevent the configuration memory contents from being changed.

Before making any changes to the panel configuration, it is necessary to ensure that this switch is in the “Enable” position. The “Enable” position is with the switch actuator set to the left in the direction of the arrow under the switch.

When left in the “Enable” position, a notification message will be given on the Syncro ASM display. This warning message will disappear 1 minute after the switch has been turned off or can be cancelled immediately by operating the front panel Reset button.

It will not be possible to perform the Autolearn sequence or transfer a configuration into the panel from the PC (as described below) unless the configuration memory is Write Enabled.

It is also necessary to operate the write enable switch whenever any changes are made to the configuration memory using the Access Level 3 “Edit Configuration” or “Set Times” menu options via the front panel controls.

8.2 Configuring the Panel (Autolearn)

When supplied, the panel will contain no configuration and when power is first applied the display will show:

```
***WARNING***

WRITE ENABLE SWITCH IS OFF
THE SYSTEM IS HALTED
SET WRITE ENABLE AND RESET THE SYSTEM
```

CAREFULLY slide the write enable slide switch (located behind the aperture in the bottom right corner of the plate) to the left position using a small screwdriver, or similar tool. Then press the internal Reset switch that can be seen through the hole in the plate with a small terminal screwdriver or similar tool.

The display will then show:

```
RE-INITIALISING PANEL

PLEASE WAIT...
```

Followed by

```
INITIALISING LOOPS, PLEASE WAIT

LOOP      NUM. DEVICES      INIT. PROGRESS
 1          000                0%
```

Initialisation can take a few minutes to complete and the larger the number of devices on a loop the longer it takes.

Panels fitted with Hochiki protocol will take significantly longer to initialise than those fitted with Apollo protocol.

At the end of the initialisation process, if there are no faults, and after the write enable switch has been CAREFULLY switched to the right position (using a small screwdriver or similar tool) the “normal” display will be shown as below.

```
13:05 Thursday 24 August 2006
AUTO CONFIGURED PANEL

USE ARROW KEYS TO ENABLE PANEL
PRESS? FOR HELP
```

On a system, which has been Auto learned, inputs, outputs and field devices will be configured to the EN54-2 default settings. Some of these defaults may be altered at access level 3 on the control panel. All can be altered via the Loop Explorer configuration programme.

It is quite common for mistakes to occur when addressing large numbers of devices and it is possible that some devices may have been set to the same address.
The control panel can detect devices that have been set to the same address and will announce a “Double address” fault if it finds any.
It is not possible for the control panel to tell which devices have been double addressed but to help find them, enter access level 2 by entering the code 2222 (or operating the key switch if fitted), go to the view devices option in the menu, select view devices by loop and make sure that all of the devices that are expected are listed.

If there is one double address fault and one device missing from the list of expected devices then it is fairly certain that the missing one is the one that has been addressed incorrectly.
It becomes a bit trickier when there are more than 2 devices with the same address or more than 1 double address but using the principle above it will be possible to find the errors by a process of elimination.

It is always much quicker and easier to commission a system which has been addressed correctly and extra care taken to fit devices with the correct address as per the installation plan will pay great dividends at the commissioning stage.

If a fairly heavily populated loop is disconnected from the panel, the panel will report all of the devices disconnected. Upon re-connection of the loop, the panel will find all of the devices again but it also has to run as a fire control panel, service other parts of the system and re-initialise the devices that have been detected. In the case of a large number of faults under these circumstances it is often quicker to get the system back to normal by re-starting the panel by pressing the Reset switch (located with the door open and to the right of the Fuse Fail LED.

8.3 Configuring the Panel (from PC)

To allow configuration from a PC it is necessary to have the Loop Explorer configuration programme installed on the computer and for the download lead (Part Number S187) to be plugged into the serial port of the computer. The other end of the download lead should be connected to the “PC” connector which is exposed when the outer door is opened and is located to the left of the fuse fail LED indicator.

When configuring the panel from a PC, it is very important to ensure that the actual configuration of devices installed matches the PC configuration.
If this is not the case then there can be a bewildering array of missing and/or unexpected devices, which can be quite confusing and difficult to diagnose.

If the exact site configuration is not known in advance, it is possible to upload an Auto-Learned configuration to the PC, add text messages and any other changes required and then download this back to the control panel. This method ensures that the configurations match, is likely to proceed without errors and provides a quick and easy method of entering text and zone number information.

Panels that are configured from a PC can have default settings for devices changed (including call points) so the system should be thoroughly tested after a download to ensure that all devices respond as expected.

To retrieve a configuration from the panel and save it onto a PC, connect the S187 download lead to the PC port of the panel and to the serial port of the PC. Open the Loop explorer configuration programme on the PC and select “Connect to Syncro panel” from the four options that are offered by the opening screen. Click OK and you will be given an option to save the file you are about to create. Give the file a name that is easily identifiable with the site and the panel location/name. Panel location/name is important on networked system in order to distinguish networked panels from each other and once the configuration file is created and the programme is open, there is an option in the panel settings to enable the panel name to be set and displayed on the panel.
Always keep a back up of configuration files with a different name to the original such as filename 01, filename 02 etc.

Once the file has been saved an option to use a dial up connection will be offered. If this facility is going to be used, select yes and enter the telephone number that will need to be dialled to connect to the panel. If this is not required select no.
The Loop Explorer programme will now open with a blank configuration. Click on the Connect icon which is the third from the right in the row of icons along the top of the screen.
This will open the PC CONNECT screen. Click on the tick box in the column on the left labelled Sync then click the button labelled Synchronise in the second row of icons on the PC CONNECT screen.
A box will be displayed showing the file transfer process from the panel to the PC. After a few minutes the file transfer will be complete. Close the PC connect box, click on the + sign next to the panel icon on the left then click on the + sign next to the loop icon. This will now show all of the devices that are connected to the panel and they can be viewed and edited as required by double clicking them. The file should be saved with am appropriate file name once edited as required.

To transfer the modified file back to the panel, first switch on the write enable switch at the panel by moving it to the left, click the connect icon at the top of the screen, put a tick in the box in the column labelled Sync and click Synchronise. The file will now be sent back to the panel with any changes that were made on the PC. The panel will display RECEIVING NEW CONFIGURATION, PLEASE WAIT... during the file transfer process and will then display the start up screens as per the Autolearn sequence above.
When the file transfer has finished, switch off the write enable switch on the panel, enter access level 2 and press the front panel reset button to clear the system fault message.
The panel will now contain the modified configuration from the PC.

Recommedation: A copy of the configuration file should be kept on the vessel to allow service agents to transfer the correct configuration to the panel, for situations where the panel board has to be replaced.

9. Facilities Menus

A number of facilities are provided which can only be reached at access level 2 or 3.

Access level 2 can be reached by entering the correct password (a 4 digit number) and pressing the enter button (or by the optional Enable Controls key switch if fitted).

Access level 3 can only be reached from access level 2 and only by entering the correct, 4-digit password then pressing the enter button.

Panels that have not been configured, or have been configured using the Auto Learn option, have 2222 as the default password for Access level 2 and 3333 as the default password for Access level 3.

Passwords can only be changed using the Loop Explorer PC configuration programme.

The Access level 2 password is required by the end user, to Silence/Acknowledge, Resound Alarms, Evacuate, operate the Function button and to Reset the system.

Any persons responsible for safety and who have been trained and authorised to use the fire alarm system should be made aware of the Access Level 2 password (or given the enable controls key where applicable).

Without the Access Level 2 password or the enable controls key where applicable, it is not be possible to control the fire panel so it is most important that the responsible person knows the password or is in possession of the enable key.

Main menu items available at access levels 2 and 3 are as follows:

ACCESS LEVEL 2 (2222)	ACCESS LEVEL 3 (3333)
Disablements	Edit configuration
View devices	Set times
Test Zones	View/print event log
Set system time	Print configuration
Contamination Status	Engineering Disablements and settings
Access level 3	Loop Data Test

Access level 3 enables a much higher level of control and must be restricted to persons trained and authorised to reconfigure the site-specific data and to maintain the Syncro ASM fire panel. Typically, engineers of the fire systems company will be responsible for Access Level 3 functions.

Before any changes are made to the configuration memory, using either the Edit Configuration or Set Times menu options, it will be necessary to CAREFULLY set the memory write enable switch to the left hand "Enabled" position, using a small screwdriver, or similar tool.

10. Detection circuits

Syncro ASM control panels are configured to communicate using Hochiki or Apollo protocol.

Short circuit isolators must be fitted in the loop wiring such that a single short or interruption in the circuit will not prevent the indication of a fire alarm from more than 32 detectors and/or manual call points.

Power is driven from the "LOOP OUT terminals and is returned to the LOOP IN terminals, where it is monitored for detection loop continuity.

If the loop is open-circuit (a cable fault or short circuit isolator operated), the panel will drive power from both the LOOP OUT and LOOP IN terminals. This ensures that despite a single break or short circuit in the wiring, all of the devices will still remain connected to the control panel. In the case of a short circuit, the short circuit isolators will isolate the faulty section of the wiring and the panel will report devices between the isolators as missing..

Both the LOOP OUT and LOOP IN connections of the panel are fitted with short circuit isolation so that a short on the cable between these terminals and the first isolator fitted to the detection circuit will be isolated, leaving the remainder of the circuit operational.

The detection circuits also supply power to operate loop-powered sounders and can provide up to 400mA in total on each circuit.

As the power required by detectors, call points and input/output units is relatively small, most of this power is available to drive sounders but the number of sounders which may be connected will depend on their volume setting and the number of other devices fitted. (see section 10).

Calculators are available for both Apollo and Hochiki detection circuit loading and these should be used if there is any doubt about the loading exceeding the maximum of 400mA.

Detection loops should be wired in a screened, fireproof cable (such as FP200) and terminated at the panel using brass cable glands. Detection loops should have the drain wire terminated at the cable gland, as described in Section 4.1

10.1 Fitting additional detection circuit (loop card)

If an additional detection circuit (loop card) is to be fitted to a single loop Syncro ASM, it must be of the same protocol (Hochiki ESP or Apollo). as the existing detection circuit.

To fit the loop card, the control panel must have mains and battery power removed.

The metal chassis should then be removed by removing the two fixing screws that hold it in place.

The loop card is supplied in a static dissipative bag and should remain in this bag until it is to be fitted.

As with all electronic components, this circuit board is very sensitive and can be easily damaged by electrostatic discharge.

Where possible, a static protective wrist strap should be worn when handling circuit boards. Where this is not available; it is advisable to touch a surface that is known to be connected to the earth of the fixed installation.

The additional loop card mounts on the left hand side of the main board and fits into two connectors labelled X7 and X8.

There are two mounting pillars on the main board to which the additional loop board should be fitted using the M3 screws and fibre washers supplied.

If the Syncro ASM panel is part of a network, there will be a network card fitted in the position where the additional loop card will fit. The network card must be removed by removing the two screws that hold it into position and easing it out of connectors X7 and X8 and the additional loop card fitted in its place and secured with the two screws that are supplied with it.

The network card should now be fitted onto the connectors on the loop card and secured into place on the two pillars with the original screws that held it in place.

After checking that the loop card is firmly located and making good contact with its connectors, the metal chassis can be screwed back into place in the enclosure.

Unused detection circuits must have the "LOOP + OUT" to "LOOP + IN" and "LOOP - OUT" to "LOOP - IN" terminals wired together to prevent open circuit faults from being reported.

The devices on the new detection loop should be added to the original configuration file using the Loop Explorer configuration programme and downloaded to the panel as described in section 7.3. If this is not done the panel will report unexpected devices on loop 2.

CAUTION – If an Autolearn is done to detect the devices on the additional loop, any previous configuration such as location text that had been allocated to the existing devices on the original loop will be erased. For this reason, it is preferable to update the control panel configuration via a PC.

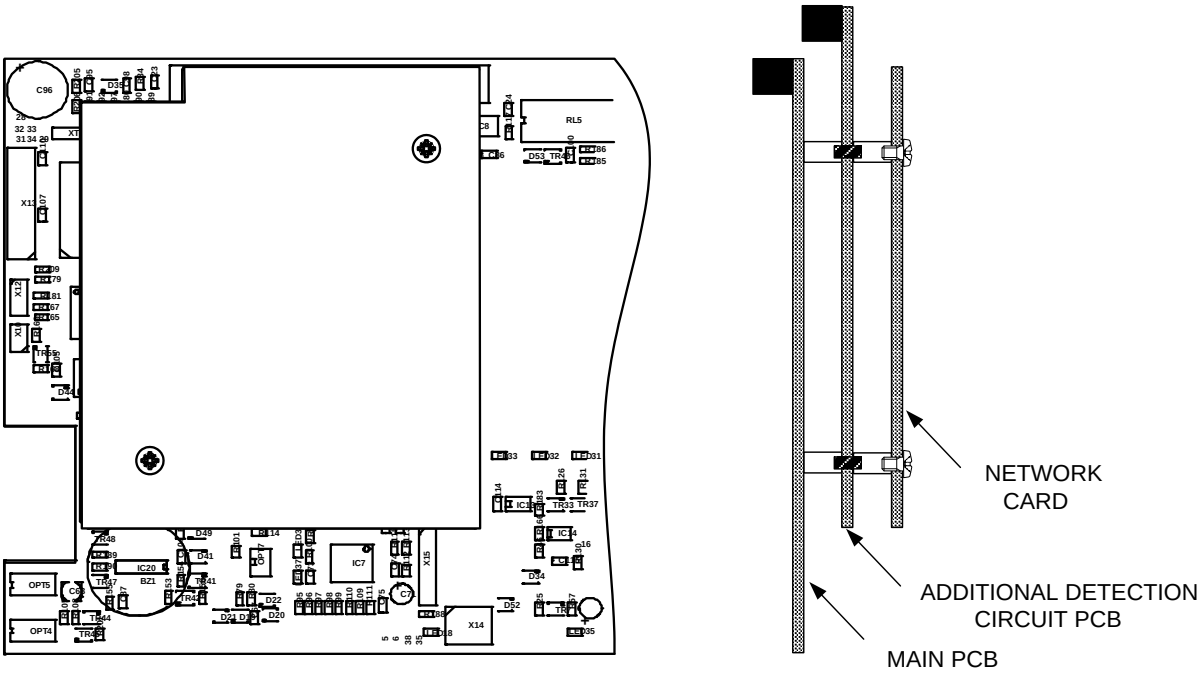

11. Loop sounders & Beacons

Loop powered sounders are available from Apollo and Hochiki. The quantity which may be connected to the loop depends on their volume and tone settings and the type and number of other devices connected to the same loop.

The permutations of devices are endless, so to assist with calculating the quantities of devices which may be connected, both Apollo and Hochiki have loop calculators available which will allow a simulation to be entered and warn of any permutations that are not allowable.

11.1 Apollo

Apollo Intelligent base sounders, Integrated base sounders and 100dB loop sounders may be set to two volume levels via segment eight of the eight bit DIL switch within the device itself. The Intelligent sounders have volume levels of 85dB or 92dB, the Integrated base sounders have volume levels of 75dB and 91 dB and the 100dB loop sounders have volume levels of 92dB or 100dB.

The current consumption of the Intelligent base sounder is 3mA at 85dB and 8mA at 92dB.
The Intelligent base sounder can be operated with only one tone, which is 500Hz/550Hz at 250mS intervals. This can be pulsed at 1-second intervals to give an alert warning if required. Apollo loop sounders can be used as a detector base or as a stand-alone device but either way; each sounder must be allocated a unique address in the range 1 to 126.

Apollo Ancillary base sounders are controlled by the remote indicator output of their host detector. As these sounders are not addressable devices, the Syncro ASM panel will not be able to identify the device during the auto learn sequence. Therefore it is necessary to configure the Syncro ASM panel to advise it that certain detectors have Ancillary Loop sounders installed. These devices are added to the system configuration file using the Loop Explorer configuration programme and are seen as address number (detector address +126). Once in the Loop Explorer configuration ancillary base sounders can be controlled by cause and effect programming.

The ancillary base sounders can be configured to respond to all output properties except for the Alert option, as the sounder cannot be pulsed.

11.3 Hochiki

Hochiki sounders can have 10 volume settings.
Each sounder can have its volume set independently or all sounders can have the same volume setting by changing the default volume on the panel settings page of the PC configuration programme.
Unless this default volume setting is changed, all sounders will have a volume setting of 85dB.
This table shows the volume levels available and the current consumption at each volume setting. Loop sounders that are used as a detector base do not need to be allocated an address in the range 1 – 127.
The Syncro ASM panel will automatically address base sounders by adding 127 to the address of the detector to which they are connected during the panel autolearn process. This means that it is possible to fit 127 detectors and 127 base sounders to a loop (dependent on sounder volume).

It is possible to alter the address of base sounders but the address will revert to 127 above the host sensor address if the panel is autolearned.

Wall sounders however must be addressed in the address range 1 to 127, using a hand held programmer, and will retain their address setting at all times.

Because each loop sounder has its own address, it is possible using the PC configuration programme (Loop Explorer) to perform cause and effects on each sounder or groups of sounders as required. This gives great scope for controlling the annunciation of the fire alarm for all types of building.

VOLUME	CURRENT
70dB	0.8mA
78dB	1.5mA
80dB	2.0mA
85dB	3.0mA
88dB	4.5mA
90dB	6.5mA
93dB	8.0mA
94dB	10mA
95dB	11mA
98dB	16mA

11.3.1 Hochiki sounder Tone Settings

It is possible to change the tone of all or individual, Hochiki loop sounders, to one of seven different tones.

Each event type has been allocated a separate default tone and these may be changed from the default by selecting the “Loop Sounder Options” tab from the panel settings window.

This window shows all of the event types and their default tones. All or any of these may be changed to another tone and it is possible for more than one event type to use the same tone.

Loop sounders will default to operate upon a fire condition. It is possible however, to operate loop sounders upon any of the seven event types. It is also possible to operate loop sounders upon more than one event although under these circumstances a hierarchy exists as follows:

EVACUATE

FIRE

ALERT

TECH ALARM

SECURITY

PRE-ALARM

FAULT

As can be seen from the above, a loop sounder which is sounding a TECH ALARM will change its tone in the event of EVACUATE, FIRE or ALERT events if it is programmed to respond to all of these.

Loop sounders can be programmed to operate upon any of the event types using the configure settings window as shown below. This window also allows the volume of the sounder to be changed from the default value, stage 1 and stage 2 delays to be set and the sounder to be selected Silenceable or not as required.

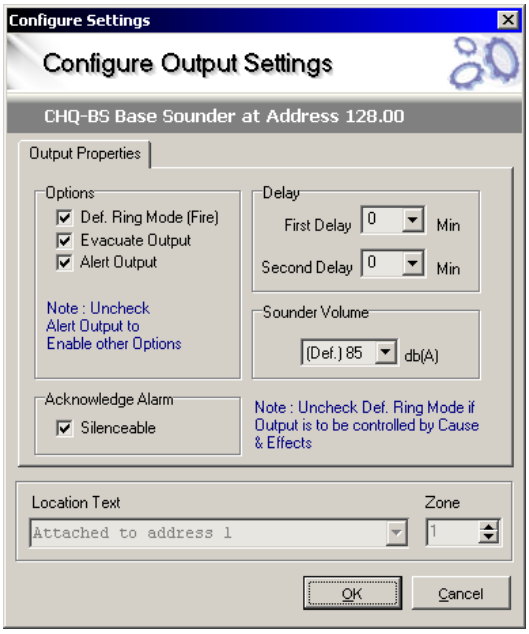

NOTE: If a loop sounder is controlled by a cause and effect operation, then the Tech Alarm tone will be used when the sounder is energised.

The possibility to change tones allows the fire alarm infrastructure to be utilised to a much greater extent for other types of audible signalling than simple pulsing or steady sounder systems.

For class change applications as an example, different tones could be used to signal class change and break times. This could also apply to the factory environment to signal break and shift changes.

The ability to operate individual sounders from dedicated inputs also allows the system to be used for fire door monitoring such that the sounder nearest the door can emit an alternative tone if the door is opened in a non-emergency situation.

12. Panel Sounder circuits

Two conventional sounder circuits are provided in the panel, each fused at 1.0A. A 10K end of line resistor monitors the circuits for open and short circuit faults.

Both circuits are configured to activate upon any fire condition and to de-activate when the Silence Alarm/ Acknowledge button is pressed on the front panel or a silence input is operated. Each sounder circuit can be configured independently via the PC configuration programme or the front panel pushbuttons (at Access level 3).

This allows sounder circuits to be operated by different methods such as zonal alarm or via cause and effects.

12.1 Stage one and stage two delays

The sounder circuits can have a single or two-stage delay if required. The first stage of delay allows up to 5 minutes for the alarm to be acknowledged.

If the alarm is not acknowledged before the first stage delay expires, then the sounders will operate.

If the alarm is acknowledged during the first stage delay, the second stage delay (again up to 5 minutes) will start.

If the alarm is acknowledged during the first stage delay and the second stage delay is zero then the sounders will not operate.

If the Alarm is acknowledged during the second stage delay, the second stage delay (up to 5 minutes) will start and the sounders will operate at the end of the delay unless the panel is reset.

Activation of two or more devices producing a fire action, a call point or an input configured to override output delays, will override the delays and operate the sounders immediately.

13. Sounder controllers

Sounder controllers are available in the Hochiki and Apollo ranges of devices and can be used for controlling conventional sounders from the detection loop.

The wiring to the conventional sounder circuits is monitored for open or short circuit faults by fitting an end of line monitoring device.

The sounder controller outputs are fully programmable as described in section 11 and section 19.

Sounder controllers require an additional 24V DC supply to power the conventional sounder circuits (or other equipment). This power supply is also monitored for failure by the control panel.

14. Relays

Volt free changeover relay contacts rated at 30 Volts DC at 1 Amp are provided for ancillary switching functions in all panels.

Under no circumstances should voltage or current outside of this limit be used with these contacts.

The default actions of these contacts as supplied from the factory are as described below: -

NAME	ACTION
FIRE	Activates on any fire condition and remains active until panel is reset
FAULT	Activates on any fault or on total loss of power and clears when faults are cleared
ALARM	Activates on any alarm, de-activates when alarm silenced / acknowledged

Each volt free changeover contact can be reconfigured independently for other actions via the PC configuration programme or the front panel pushbuttons (at access level 3).

This includes delays as described for the sounder circuits above.

15. Remote control inputs

Five inputs are provided in the panel, which have default actions as described in the table below:

INPUT	DEFAULT ACTION
FLT	Operates outputs configured to operate on fault condition.
RES	Resets the control panel
INT	Operates all sounder outputs intermittently
CNT	Operates all sounder outputs continuously
SIL	Acknowledges the alarm (silences all sounders)

NOTE: The RES / INT / CNT / SIL inputs should only be available at Access Level 2. Care must be taken to ensure these inputs cannot be operated without some form of access control in order to maintin conformity to EN54-2.

All inputs can be re-programmed to have a different action, delay, zone and location message using the PC configuration programme or front panel controls (at Access level 3)

To activate the inputs, the 0V connection is connected to the input(s) as shown below.

All inputs are non-latching as default.

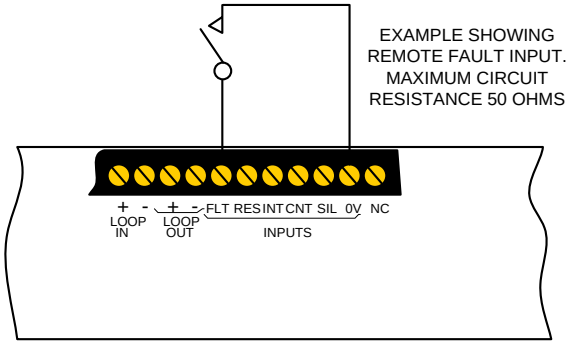

The line impedance should be less than 50 ohms for reliable operation.

16. Remote I/O serial bus

The Syncro ASM control panel has a serial communications bus to which additional I/O, relay, sounder and conventional detection zone boards may be connected. The serial bus also supports up to 15 of the full function Syncro View repeater panels.

Up to 32 I/O units can be connected to the serial bus and these can be a mix of any type.

Limited numbers of these units may be connected to the panel's Auxiliary 24V supply however the fuse rating of the Auxiliary supply and the effect of the extra power required on battery standby must be taken into consideration. Full details of power consumption for devices that connect to the serial I/O bus can be found in the O&M manuals of the individual devices.

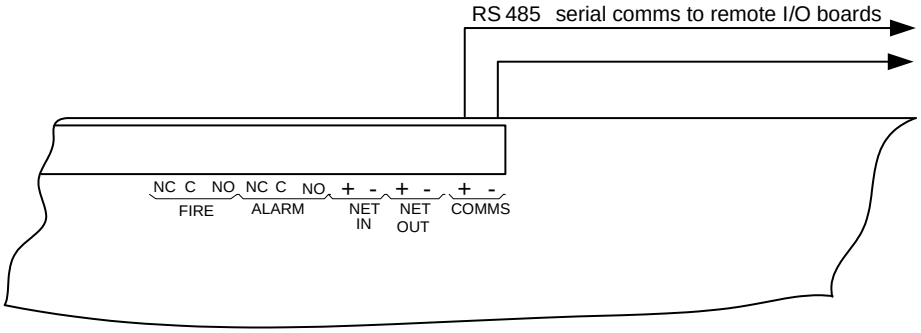

Connection of remote I/O boards to Syncro ASM panel.

16.1 16 channel I/O board

The 16 channel I/O boards can be individually configured using the Loop Explorer configuration programme and each channel can be an input or an output.

When added to a control panel, all channels default to inputs with and their action when activated will be FAULT. Any or all channels may be changed to outputs via the Loop Explorer configuration programme. When channels are changed to outputs they will default to DEFAULT RING MODE. This means that they will switch on when a fire condition is present on the control panel as COMMON ALARM, ZONED ALARM or 2-STAGE ALARM (see section 19.3.2).

Inputs to these boards are via opto-isolators, which offer good protection against noise and transient voltages. Channels configured as outputs have an open collector transistor, so must be used with care to avoid damage by shorting or sourcing too much current. For full details of 16 channel I/O boards refer to manual MAN-1056.

16.2 8 way relay board

The 8 way relay boards have individual, volt free changeover relay contacts which can be configured using the Loop Explorer configuration programme to operate in response to alarms or cause and effects as required.

Relay contacts are rated at 30V DC 1 Amp. For full details of 8 way relay boards refer to manual MAN-1074.

16.3 6 way sounder board

The 6 way sounder boards has 6 voltage reversing, monitored sounder outputs which can be programmed to operate as required on response to alarms or cause and effects.

The sounder boards also have 2 programmable, volt free changeover relay contacts and 2 opto isolated inputs all of which are also fully programmable via the Loop Explorer configuration programme. For full details of 6 way sounder boards refer to manual MAN-1075.

16.4 4 way zone board

The 4 way zone board has 4 conventional detection zones, 2 monitored sounder outputs and two programmable volt free, relay contacts which default to fire and fault actions.

The 4 way zone board is in effect a self contained 4 zone conventional control unit. For full details of 4 way zone boards refer to manual MAN-1077.

16.5 Syncro View repeater unit

The Syncro View repeater is a very cost effective, full function repeater panel that connects to the remote serial I/O bus and provides full indication and control of all panels' status and functions in a compact, slimline enclosure.

Up to 15 View repeaters may be connected to the serial bus as well as any combination of the other types of I/O boards up to a maximum of 32.

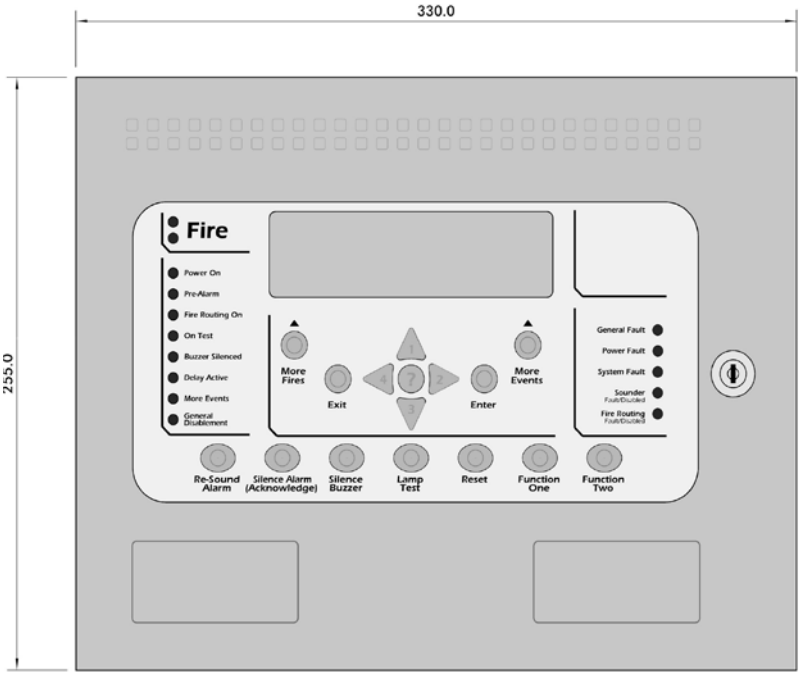

View repeaters have a low standby current consumption and can be powered by the Aux 24V output of the Syncro ASM control panel. For full details of Syncro View repeater units refer to manual MAN-1092.

17. Power supply

The control panel is fitted with an EN54-4 approved 2.3 Amp power supply and battery charger capable of charging up to 9Ah batteries. A separate power supply should be used if larger batteries are required.

The power supply requires a 230V AC mains connection to the fused, mains terminal block in the top left corner of the back box.

The power is split between the charging circuit and power supply such that a maximum of 1 Amp is available to charge the batteries if required, which leaves 2 Amps to run the control panel and peripherals. If the batteries are fully charged and do not require any power, the full 3 Amps is available to run the control panel and sounder load.

The power supply incorporates sophisticated monitoring of the condition of the power system. The battery charging output is temperature compensated to maximise the service life of the batteries.

The following fault conditions are signalled at the control panel: -

MAINS FAILED
BATTERY DISCONNECTED
BATTERY LOW VOLTAGE
EARTH FAULT

The mains fuse fitted is a T1.6A 250V HRC 20mm type and must be replaced upon failure with a fuse of the same type to maintain the safety rating of the power supply.

17.1 Aux. 24V supply

A separately fused auxiliary 24 Volt output is provided for powering additional I/O boards or other equipment connected to the fire alarm system. When switching inductive loads such as relays, these should be adequately suppressed using a reverse connected diode.
The Aux 24V supply fuse is of the self-resetting type and is rated at 500mA. Failure of the fuse is monitored by the system and announced as "Aux. 24V fuse failed".
The impact on battery standby duration must be carefully considered when using the Aux 24 volt output. Constant use of the full 500mA capability of this output for instance would require an additional 15Ah of battery capacity.
Ideally, use of the Aux. 24V output should be restricted to powering a limited number of additional I/O boards or switching equipment when an alarm condition occurs.

17.2 24V OUT terminals

The terminals on the circuit board marked 24V OUT should not be used for any part of the installation. These terminals are reserved for powering additional equipment that is factory fitted only. Using these outputs to power equipment outside of the panel enclosure will compromise the integrity of the system.

17.3 Remote PSU

The terminals marked Remote PSU are for the connection of a remote, EN54-4 compliant power supply. These terminals are used on control panels that have an external power supply and larger batteries in cases where standby periods longer than 24hours are required.
There are two sets of terminals which allow two transmission paths to be accommodated as required by EN54-4 section 6.6. A power fault input is also provided to signal faults from a remote power supply on the Syncro ASM panel.

17.4 Battery capacity

To enable the system to continue to function in the event of a failure of the mains supply, batteries must be fitted. These are not supplied with the control panel.

Batteries should be of the re-chargeable, sealed lead acid type. They should be new (less than six months old) and sized according to the local codes of practice for the standby period required, preferably by measuring quiescent and alarm loads for the particular hardware configuration installed or using the formula listed below to calculate the required capacity.

The battery capacity required can be calculated using the following information.

This table shows the panel current consumption but does not take into account device loads, additional I/O boards, or use of the Aux. 24 Volt output. Systems using these facilities should have their battery size calculated according to the additional information below.

PANEL TYPE	QUIESCENT CURRENT	ALARM CURRENT
Single loop stand alone	0.13A	0.3A
Two loop stand alone	0.195A	0.37A
Single loop with network card	0.190A	0.365
Two loop with network card	0.260A	0.430A

To calculate the capacity of the battery required the following formula should be used.

(Quiescent load (A) x 1.25) X Standby period (hours) + ((Alarm load x 1.75)/2) = Ah

The maximum size of battery, which can be fitted inside standard control panels, is 9 Ah (2 x PBQ 9HR-12).

Batteries above this size will need to be fitted in a separate enclosure and charged by a suitably rated battery charger.

Any additional load connected to the system from the Aux. 24V output such as additional I/O boards should be catered for by additional capacity using the same formula as above and adding the result to the calculated capacity required to maintain the control panel.

The current consumption of additional I/O boards is as follows:

16 channel I/O board - 20 milliamps quiescent, up to 1A full alarm
8 way relay board – 10 milliamps quiescent, 250 milliamps alarm
6 way sounder board – 30 milliamps quiescent, 260 milliamps alarm (plus sounder load)
4 way conventional zone monitor board - 70 milliamps quiescent, 200 milliamps alarm (plus sounder load)

If several I/O boards need to be powered then it is likely that the standby battery capacity will be exceeded and a separate, EN54-4 compliant power supply and battery set should be installed to power these.

The standby power requirements for the detection devices, call points, modules and loop powered sounders should be calculated using the device manufacturers technical data. Some device manufacturers have calculators available to assist with this.

18. Programming via a PC

Due to the use of the very latest microprocessor and memory technology, the Syncro ASM fire control panel is an extremely powerful machine.

As such, it can be programmed in an almost infinite number of ways, some of which will not give the visual and audible indications expected from a fire system.

Any re-programming from the factory default settings must therefore be carried out by competent fire systems engineers and thoroughly tested against the system plans before final commissioning.

Although the Syncro ASM is very powerful and can be programmed to perform some complex tasks, the principals adopted in the way that inputs and outputs are handled make it conceptually very simple.

18.1 Panel settings

There are a number of attributes for the panel which can be changed using the configuration programme as shown below.

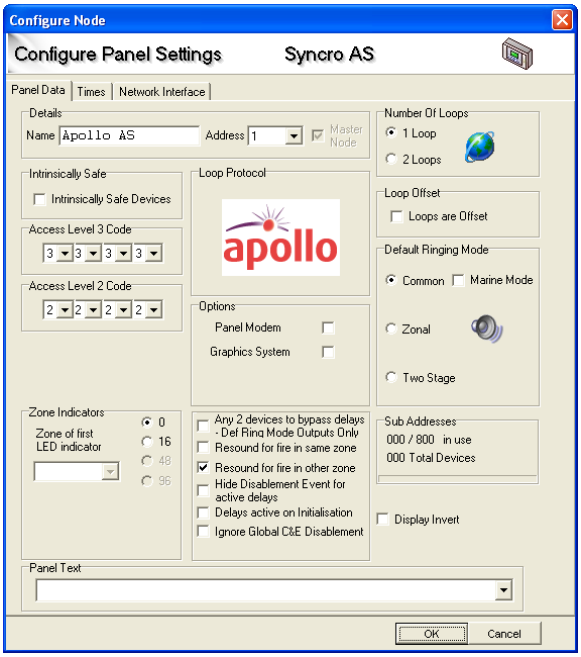

18.1.1. Panel name

By default the panel name will be set to match the protocol that the panel is configured to communicate with. I.e. Apollo panel or Hochiki panel.

If the panel is part of a network of panels, it can be useful to have a panel name, which would normally describe its location such as the name of the building or facility where the panel is mounted.

The panel name can be up to 15 characters long.

18.1.2. Panel address

To enable control panels to know about each other when connected to a network, each panel must have a unique address. This is the node address and should be a number between 1 and 64. Syncro ASM panels that do not have a network card installed will always default to address 1.

18.1.3. Protocol

Control panels are supplied as Apollo or Hochiki compatible.

The label inside the control panel showing the part number identifies which protocol is being used by starting with either an H (Hochiki) or an A (Apollo).

When making a configuration file, the correct protocol panel must be selected. Repeater panels are protocol independent.

18.1.4. Number of loops

Control panels are supplied with 1 or 2 detection loops fitted. The configuration file should be created with the same number of loops as the control panel for which it is destined.

The Response repeater panel has no detection loops fitted, and is protocol independent. This panel option may be selected when adding panels to the configuration only.

18.1.5. Default ringing mode
When control panels are supplied, the default-ringing mode is set to common alarm. In this mode, any fire condition will operate all sounders continuously.

The mode can be changed to zonal alarm, which means that only sounders in the same zone as the signal that originated the alarm will operate.

A third option of 2-stage alarm is also available which causes the sounders in the same zone as the signal that originated the alarm to operate continuously and sounders in all other zones to operate intermittently.

18.1.5.1 – Marine Mode
This option applies to the Syncro ASM panel only. When selected, the two panel sounder circuits will operate in an "Abandon Ship" mode (7 short pulses followed by a single long pulse) when an Evacuate input is activated.
The two panel sounder circuits will operate continuously on a Fire event by default, or as configured using the loop explorer program.

Loop sounders and loop sounder control unit operation will continue to operate continuously when an Evacuate input is operated or when there is a fire event. Their behaviour is not changed by the selection of the Marine Mode option.

18.1.6. Access level code changes
The default codes to enter access level 2 and access level 3 can be changed via the configuration programme only.

18.1.7. CHQ-BS Loop Sounders
For Hochiki systems, it is possible to select the default volume of all CHQ-BS loop powered sounders. Each sounder may be configured independently to either the default setting or one of 10 volume settings.

NOTE: Volume settings of CHQ-WS 100dB wall sounders may not be configured from the control panel, even though this device has the same type code as the CHQ-BS loop sounder.

This option is not available for Apollo systems as the volume can be adjusted only by setting a switch on the device.

18.1.8. Panel text
A forty-character message can be entered which is displayed when the control panel is in a quiescent condition. This may be the company name and service contact telephone number or any other message agreed with the end user.

18.1.9. Panel Modem Fitted
When selected, the panel expects a modem to be fitted to the PC port. The panel will poll the modem at 90-second intervals and expect a response from the modem. If the modem does not respond, then a disconnected modem message will be shown on the panel display.

18.1.10. Graphics System
When this is selected, event cleared messages will be sent to the PC port and printer port. This allows a graphics system to track and automatically clear events, provided this facility is supported by the graphics system. This is deselected by default, to reduce printer paper consumption. When selected, event cleared messages will be printed after each event or activation has been reset.

18.1.11 – Loop Offset
This option applies only to networked systems. By default the device address will comprise the panel number, loop number and device address number. The loop number will be either 1 or 2 for a Syncro AS panel.
If the loop offset option is selected, the loop numbers are shown as the next incremented loop number from the previous network panel. Therefore for a network of four AS panels, some with offset selected, the loop numbers will be as shown in the example below
Panel 1 (Syncro AS 2 loops) – Panel 1 Loop 1, Panel 1 Loop 2
Panel 2 (Syncro AS 2 loops and loop offset selected) – Panel 2 Loop 3, Panel 2 Loop 4
Panel 3 (Syncro AS 1 loop, NO loop offset selected) – Panel 3 Loop 1
Panel 3 (Syncro AS 2 loops with loop offset selected) – Panel 4 Loop 2, Panel 4 Loop 3

18.1.12 – Apollo Intrinsically Safe Devices
This option is only shown for the Apollo protocol panel and should be selected when using Apollo XP95 Intrinsically Safe (IS) devices connected to the detection loop via an XP95 protocol translator and barrier arrangement.
When selected, the maximum number of detection device LED indicators that can be consecutively illuminated is reduced from the default of 5 to 2 indicators, to reduce current through the translator / barrier hardware.

18.1.13 – Zone Indicators
This option typically applies to networked systems and allows the 16 "Fire in Zone" indicators to be re-mapped to alternative zones in steps of 16 zones.
Therefore on a networked system with panels in different buildings, panel 1 could display zones 1-16, panel 2 displays 17-32 etc.
Note: Special display screening is required to ensure that the correct indicators are mapped to the appropriate zone label.

18.1.14 – Display Invert
This option is used to change the LCD status display format. By default, black lettering is shown on a green background. Selecting this option will change the display to green lettering on a black background. This is useful in reducing the brightness of the display when the panel is installed in darkened locations, such as control rooms and ships bridges.

18.1.15 – Any 2 devices to bypass delays – Def Ring Mode outputs only
When this option is set, any delayed outputs configured to respond to the Default Ring Mode pattern will operate immediately upon the activation of any second fire signal.
This applies to any combination of two detection device types anywhere on the Syncro network.

18.1.16 – Resound for fire in same zone
When a fire occurs in a zone and the sounders have been silenced, by default the sounders will not activate when a second detector in the same zone goes to fire.
Selecting this option will cause the silenced sounders to activate from a second detection device fire in the same zone.

18.1.17 – Resound for fire in other zone
When a fire occurs in a zone and the sounders have been silenced, by default the sounders re-sound when new fire event is reported from a different zone.
Deselecting this configuration option will stop the silenced sounders from activating on the new zone fire event.

18.1.18 – Hide Disablement Event for active delays
This option applies to V5.xx firmware control panels only. EN54-2 required that systems configured with delayed outputs there should be the facility to “disable” the immediate operation of the outputs, to turn the delay function on. The standard specified that this facility was a disablement event and therefore the general disablement indicator had to be illuminated whilst the delay facility is active, which was unpopular in some markets. Selecting this option suppressed the General Disablement indication and the “Immediate operation disabled” event.
Amendment A1 of EN54-2 revised the requirements for the switching on/off delays so that the disablement event was no longer necessary. V6.xx firmware panels are designed to the revised EN54-2 standard and therefore this option is obsolete.

18.1.19 – Delays active on initialisation
This option will switch delays on by default when the panel is restarted or powered on. It is recommended that this option is selected on any system where delayed outputs are configured.

18.1.20 – Ignore Global C&E Disablement
When disablement cause and effects are configured and activated, they are shown in the status windows of all networked panels regardless of the network interface settings or whether any items are disabled on the panels by the cause and effect. Selecting this option will only show the disablement cause and effect active event on networked panels that have inputs or outputs disabled as result of the disablement cause and effect.

18.1.21. Day/Night times
Day night change times can be set for each day of the week by selecting the Times tab on the panel settings screen.

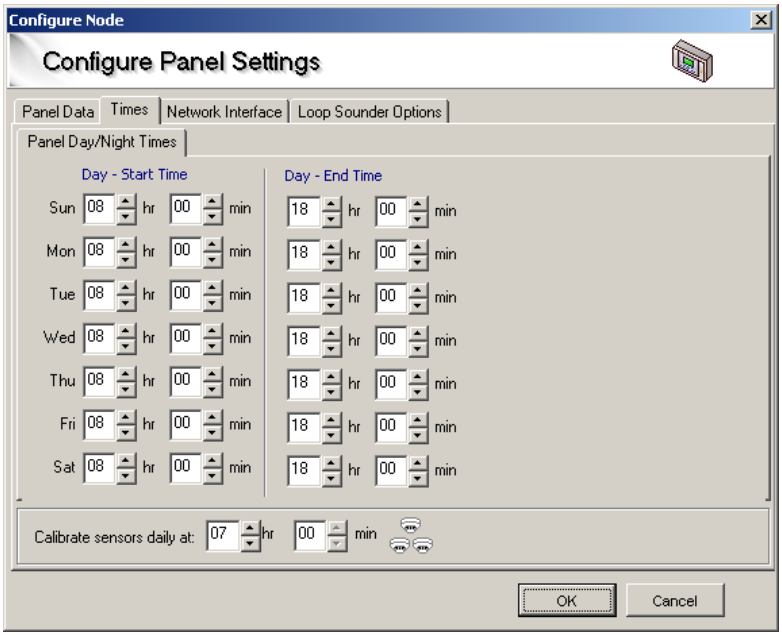

The sensitivity of detectors can be varied during a 24-hour period. This is commonly known, as Day/Night mode but can be either or both as any period in any 24 hours can be selected as day or night.

It is only necessary to set the day start and end times for each day of the week.

18.1.22. Calibration time
All sensors are re-calibrated every 24 hours. This time is selectable, so that sensors are not calibrated at a time when there is a high background pollution level. The calibration time should be set to a time when the building is quiet, with little air movement.

18.1.23 Network Interface
In a networked system, each panel can be configured to respond to individual event types from any or all other panels on the system. The default setting is for all panels to respond to and display all events.

By selecting the appropriate tick boxes, each panel can be configured to respond in a unique way.

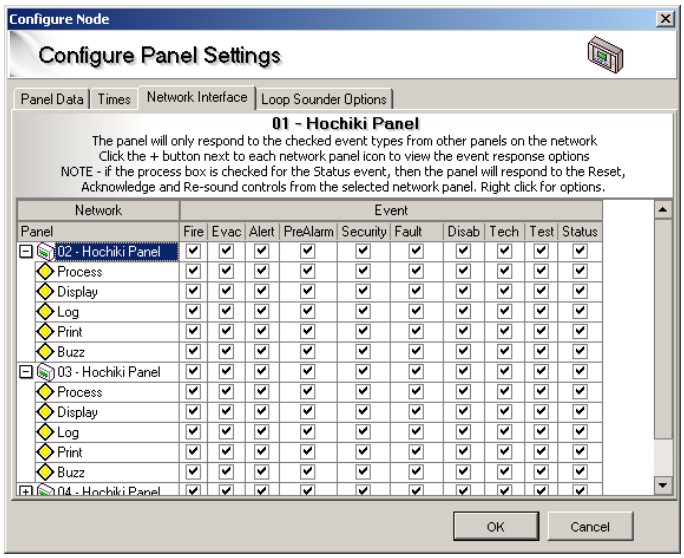

18.1.24 Loop Sounder Options

This is detailed in Section 10 of this manual.

18.2. Inputs

To simplify programming and promote an easy understanding of the system, the operation of the Syncro ASM panel has been designed around a very simple principle.

This principle is that all inputs are handled in exactly the same way, whether they are from a loop device, a programmable input on the panel, an I/O board or the programmable pushbutton on the front panel.

This means that any input (apart from a smoke or heat sensor which must always report fire) can be allotted a set of attributes, which define how the control panel will respond when the input is activated.

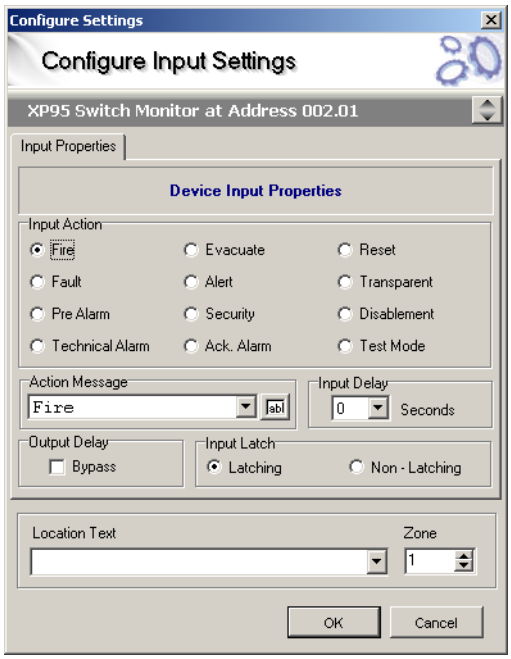

As mentioned previously, because this is fundamentally a fire system, automatic sensors cannot have their action attributes changed For sensors the attributes, which may be altered, are as follows:

ADDRESS (1-240)

ZONE (0-500)

LOCATION TEXT (Up to 40 characters)

DAY SENSITIVITY
NIGHT SENSITIVITY
INDICATE PRE-ALARM
LOOP SOUNDER FITTED AS DETECTOR BASE
INPUT DELAY
OUTPUT DELAY BYPASS

For all other types of input however, there is an input action attribute, which empowers the system with control possibilities way beyond that of a normal fire alarm. Care must be taken to ensure that the system complies to the requirements of EN54-2 and local fire regulation requirements when these inputs are configured with delays or different input actions.

The following describes how the control panel will respond to each of these input actions.

18.2.1. Fire action

Being a fire control panel, the fire action will probably be the most widely used and a fire input will be announced by the following:

COMMON FIRE LEDS
ZONAL FIRE LEDs (If fitted)
PULSING BUZZER
PANEL SOUNDER OUTPUTS
ALARM CONTACT
FIRE CONTACT
LCD FIRE MESSAGE, ADDRESS AND LOCATION TEXT OF INPUT

18.2.2. Fault action

Inputs attributed the fault action will be announced by the control panel as follows:

GENERAL FAULT LED
CONTINUOUS BUZZER
FAULT CONTACT
LCD FAULT MESSAGE, ADDRESS AND LOCATION TEXT OF INPUT

18.2.3. Pre-alarm action

Sensors or inputs can generate a pre-alarm. The control panel will respond as follows to a pre-alarm:

PRE-ALARM LED
CONTINUOUS BUZZER
LCD PRE-ALARM MESSAGE, ADDRESS AND LOCATION TEXT OF INPUT

18.2.4. Tech. alarm action (Technical alarm)

To allow a message to appear at the panel without necessarily performing any actions, technical alarm input is available which produces the following response by the panel:

CONTINUOUS BUZZER
LCD TECHNICAL ALARM MESSAGE, ADDRESS AND LOCATION TEXT OF INPUT

18.2.5. Evacuate action

The evacuate action allows all sounder outputs and sounders to be operated continuously from an input anywhere on the system with the following response at the panel:

COMMON FIRE LED's
CONTINUOUS BUZZER
ALARM CONTACT
PANEL SOUNDER OUTPUTS CONTINUOUS
LCD EVACUATE MESSAGE, ADDRESS AND LOCATION TEXT OF INPUT

18.2.6. Alert action

The alert action allows all sounder outputs and sounders to be operated in a pulsing mode from an input anywhere on the system with the following response at the panel:

CONTINUOUS BUZZER
PANEL SOUNDER OUTPUTS PULSING
LCD FIRE ALERT MESSAGE, ADDRESS AND LOCATION TEXT OF INPUT

18.2.7. Security action

The security action allows appropriately configured Hochiki CHQ-BS sounders to sound the selected Security tone from an input anywhere on the system with the following response at the panel:

LCD SECURITY ALERT MESSAGE, ADDRESS AND LOCATION TEXT OF INPUT
CONTINUOUS BUZZER

18.2.8. Silence alarm action

An input programmed as Silence will silence any sounders that are operating and display an event message on the panel for the duration of the input being activated. The event is also stored in the event log.

18.2.9. Reset action

An input designated as reset will not produce any visible effect at the control panel but will reproduce the action of the reset button on the panel i.e. reset the alarms.

LCD RESET MESSAGE

18.2.10. Transparent action

A transparent input will have no effect at all on the panel. The only result of a transparent input is to control outputs via cause and effects configuration

18.2.11. Disablement action

Disablement inputs are used to disable a part or parts of the system via cause and effects configuration (normally for testing purposes).

When an input designated as a disablement is operated, the panel will display the following:

GENERAL DISABLEMENT INDICATOR
CONTINUOUS BUZZER
ADDRESS (1-240)
ZONE (0-500)
LCD DISABLEMENT MESSAGE, ADDRESS AND LOCATION TEXT OF INPUT

Note: If sounders are disabled by the action of a cause and effect then the Sounders Disabled LED indicator will also be lit.

18.2.12. Test mode action

Inputs given the test mode attribute activate a special type of cause and effect which enables the system to be tested without activating selected parts of the system (plant shutdown relays for instance).

When a test mode input is operated, the panel will respond as follows:

ON TEST LED
LCD ON TEST MESSAGE, ADDRESS AND LOCATION TEXT OF INPUT

18.3. Outputs

Control of outputs uses the same philosophy as that described for inputs, i.e. all outputs are treated the same, whether they are loop controlled relays, loop sounders, sounder controllers, panel sounder outputs, panel programmable relays, remote I/O board outputs or the panel mounted programmable LED indicators.

Any output can be given a set of attributes, which defines, how the output will respond to input conditions.

Although this may appear to be nonsense in some cases, (a loop controlled sounder which doesn't operate upon a fire condition in its own zone for instance), this approach does provide a simplicity of understanding and a versatility and flexibility which would not exist if there were a different set of rules for each output.

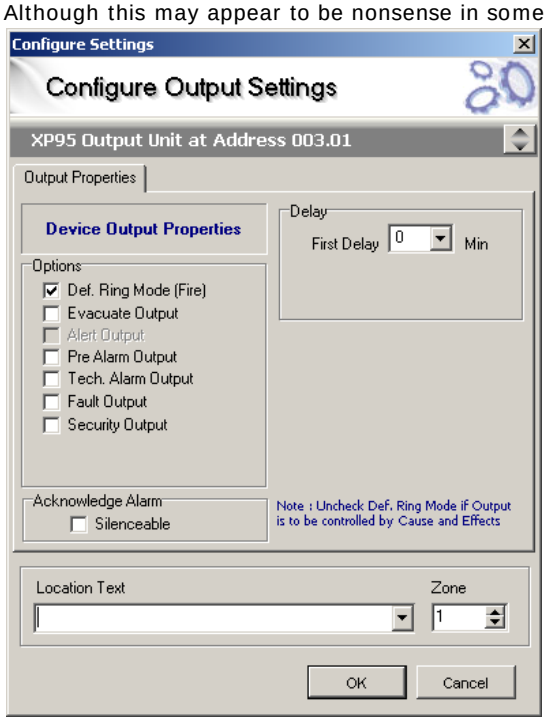

There are default attributes for all types of output, which are factory set and will not change unless re-configured. This ensures that panel sounder outputs, bell controllers and loop sounders for instance, will respond to fire conditions unless the configuration for these outputs is deliberately changed.

NOTE – When configuring system outputs, care should be taken to ensure that the output operation conforms to the local fire regulation requirements.

The editable attributes are as shown in this screen capture from the PC configuration programme.

The following describes how each of these attributes affects the operation of the output.

18.3.1. Evacuate Output

An evacuate output will turn on continuously when any evacuate input is operated. This normally applies to sounders and would normally be accompanied by the Def. Ring Mode and Silenceable attributes.

Note: Any output on the Syncro ASM system is treated as a sounder if the Silenceable and Evacuate Output attributes are selected. If any of these outputs are faulty or disabled, the sounder fault/disabled indicator will illuminate. These outputs would also be disabled by the 'Disable all sounders' menu option.

18.3.2. Def Ring Mode.

Normally applicable to sounders, Def. Ring Mode will turn the output on, upon a fire condition as defined by the global default ring mode set on the Panel Settings page of the PC configuration programme or as set via the Edit Configuration menus on the panel.

There are three options for Def. Ring Mode:-

Common Alarm - All outputs operate continuously regardless of which zone they are in.

Zoned Alarm - Outputs in the same zone as the input, which caused the alarm, will operate continuously.

2 Stage Alarm - Outputs that are in the same zone as the input which caused the alarm will operate continuously whilst outputs in all other zones will pulse 1 second on - 1 second off.

The factory default setting for the panel Default Ring Mode is Common Alarm.This normally applies to sounders and would normally be accompanied by the Evacuate and Silenceable attributes.

Note: When controlling outputs using cause & effects the def ring mode should be de-selected to ensure that the output is only controlled by the cause and effect logic.

18.3.3. Silenceable

Silenceable is normally applicable to sounder outputs and ensures that the output switches off when the alarm is silenced/acknowledged by the front panel pushbutton or operation of an input that is configured as an Ack. Alarm (Acknowledge Alarm) input .

Note: Any output on the Syncro ASM system is considered as a sounder if the Silenceable and Evacuate Output attributes are selected. If any of these outputs are faulty or disabled, the sounder fault/disabled indicator will illuminate. These outputs would also be disabled by the 'Disable All Sounders' menu option.

18.3.4. Alert

An alert output will pulse on and off when any alert input is operated. This normally applies to sounders and would normally be accompanied by the Def. Ring Mode and Silenceable attributes i.e. a sounder output. Note: Some devices do not support pulsing outputs.

18.3.5. Stage one delay

Outputs can be delayed from 0 to 5 minutes in half-minute steps by changing the default delay of zero to the desired time delay setting.

18.3.6. Stage two delay

If the output is silenceable, the stage two-delay option becomes available. The stage two delay gives an additional time before the output operates after the alarm is acknowledged during the stage one delay.

Note: Care must be taken when configuring outputs with a combination of delays to some outputs and no delays to other outputs. To start the Stage two delay, the Silence Alarm/Acknowledge button must be pressed during the Stage one delay period. If outputs elsewhere on the system are configured with no output delays and are also configured as silenceable, then these outputs will be silenced when the stage one delay is acknowledged.

In the majority of systems, the delays to outputs are configured to <u>all</u> sounder outputs to allow a variable search time and therefore this comment is not applicable.

18.3.7. Zoning

Each output can also be put into a zone or not as required. It is useful to put outputs into zones if the output is required to respond to default ring mode or is to be controlled by a cause and effect entry.

Outputs that are not put into a zone and are configured to respond to default ring mode will always turn on with any fire condition (i.e. common alarm). Care should be taken to ensure that no more than 32 devices should affected by a single short or break in any detection circuit.

18.3.8. Location text

Finally, each output can be given a location address. As well as being useful in identifying devices with monitored outputs and additional power, for fault conditions, the location address can be useful in identifying the device when compiling cause and effects programmes.

18.3.9. Tech alarm

A Tech alarm output will turn on continuously when any Tech alarm input is operated.

18.3.10. Pre-alarm

A pre-alarm output will turn on continuously when any pre-alarm input is operated.

19. Cause and effect programming

For more complex applications, it is often a requirement to control plant, ventilation or access control systems in the event of fire situations to assist with evacuation or to provide safety escape routes.

Because the Syncro ASM system has inherent flexibility, this is simple to achieve by applying cause and effects to inputs and outputs anywhere on the system.

Cause and effects can be started or acted upon by any part of the system not just the detection loop or control panel but by both of these and by the additional I/O modules too.

It is also network wide. Any part of the system can contribute to a cause and effect action and similarly any output can be operated by an input or any combination of inputs.

With careful planning, this can save costs on installation by reduced wiring runs and can be changed at any time to suit changes in requirements.

Cause and effect programming requires the Loop Explorer software (which will run on a Windows ® 95 compatible computer) and a download lead to transfer the data to the control panels.

Using cause and effect programming it is possible to combine inputs or zones using logical operators, to operate on outputs in any manner desired.

It should be noted here however that when using zonal cause and effects the system will act upon fire inputs in the zone of activation only. Inputs in the selected zone that are not configured as fire event type will not contribute to a zonal cause and effect.

Cause and effects can also be used to disable any outputs or groups of outputs in response to the chosen input conditions. This is particularly useful where normal operation of the fire system requires regular intervention by the end user as switches can be provided anywhere on the system to allow isolations to be performed without operating the control panel.

Also to assist the end user and encourage regular testing, a special "Test Mode" cause and effect facility is included which allows specific parts of the system to be tested without operating sounders or shutting down plant etc. This would normally have to be done by disabling individual outputs at the control panel with the risk of missing something and shutting down an important plant or process.

Full details of cause and effect programming are included with the Loop Explorer software, which also allows full system configurations to be created and downloaded to individual or an entire network of control panels using a simple graphical user interface.

The Loop Explorer programme contains comprehensive, context sensitive help files and example applications.

NOTE – When configuring the system using cause and effects, care should be taken to ensure that the system operation conforms to the local fire regulation requirements.

20. Networking

It is possible to connect control panels such that information can be shared between them and for control panels to operate outputs on other control panels in response to alarm conditions or cause and effects configurations.

To do this, each panel must be fitted with a networking board, which plugs onto the main display board into connectors X7 and X8 on single loop panels or onto the loop 2 board on 2 loop panels.

To fit a networking board, the panel must have both its mains and battery power removed.

The PCB chassis should be removed from the enclosure by removing the two fixing screws holding it in place.

Remove the screws and washers from the two fixing pillars located in the network boards fitted position on the left side of the chassis looking at it from the back.

Locate the network board over connectors X7 and X8 and push the board firmly into place until it is fully located in the connectors. Fit the screws and washers through the two holes in the network board and into the fixing pillars to hold the board in place.

The PCB chassis can then be fixed back into the enclosure and held in place by the two fixing screws removed earlier.

Each control panel has two pairs of terminals on the terminal board for connection of the network cable in and out. It is recommended that a cable such as Belden 9841 suitable for transmission of EIA RS-485 data be used.

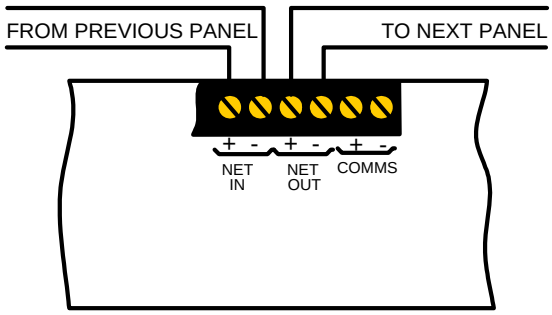

The network connection must come into each panel on the "Network In" terminals and go to the next panel on the "Network Out" terminals, returning to the first panel "In" from the last panel "Out" terminals.

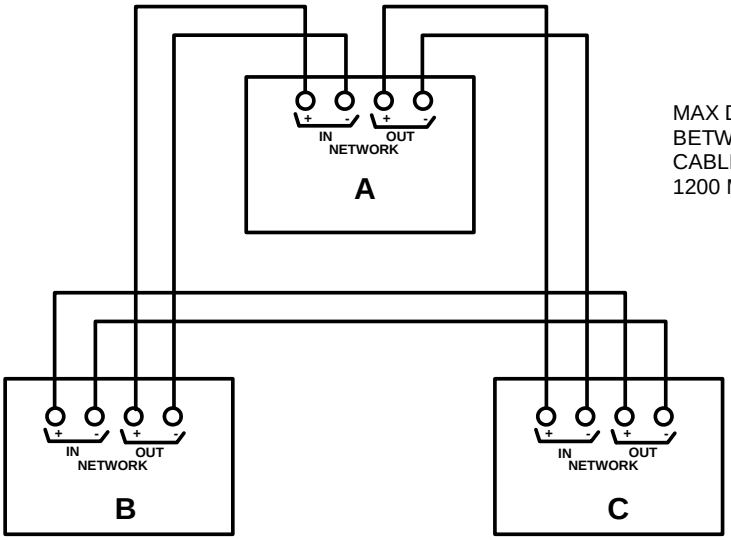

MAX DISTANCE BETWEEN ALTERNATE CABLE SEGMENTS IS 1200 METRES

Network boards are fitted with isolators, which disconnect faulty sections of cable and allow the network to continue working by using the return path so it is most important that this wiring configuration be adhered to.

A more detailed description of networking capabilities can be found in the Syncro ASM Networking Manual.

21. Panel Settings

21.1. Contrast Adjust

The viewing angle/contrast of the Syncro ASM front panel display may be adjusted by turning the CONTRAST adjust potentiometer. The contrast adjust potentiometer can be accessed by opening the front cover of the control panel and is labelled CONTRAST.

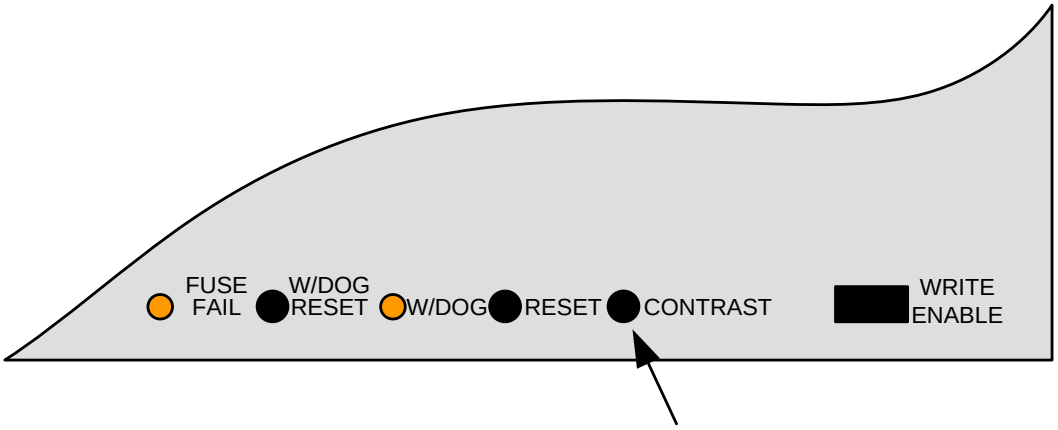

DISPLAY CONTRAST ADJUST

21.2. Network address setting

If there is more than one panel on the system, or the panel is communicating with a network repeater panel, then a network card will need to be installed within each panel in the network.
Each panel will need to be allocated separate network address identification. This is performed by use of a binary coded DIL switch on the network card.

The network card is fitted to the back of the main PCB. The plate to which the main PCB is attached must be removed from the control panel to access the address switch.

Turn off the mains power and disconnect the batteries before removing the plate from the panel. Remove the two fixing screws that hold the plate in position and store them safely so that they can be replaced.

Turn the plate upwards towards the top of the enclosure to expose the network card and address DIL switch.
Set the required binary address on the network card DIL switch.

Put the plate back into its original position and fix with the two screws that were previously removed.

After a network card has been added, it will be necessary to auto configure the panel, to clear the "unexpected network card" fault message. This action will also save the panel address in non-volatile memory and allow the site configuration file to be transferred to the panel at the set address.

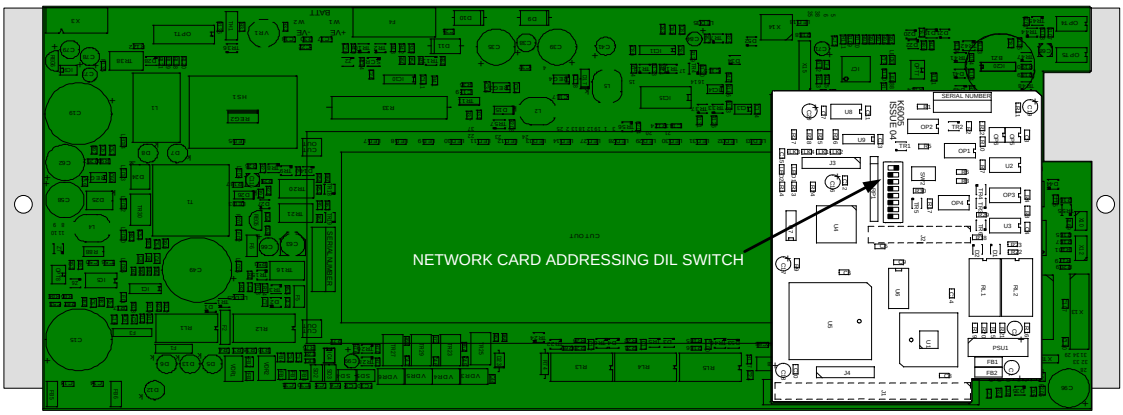

22. Panel specification summary

22.1. Recommended cables

All field wiring should be installed using fire rated cables such as FP200, MICC or Fire Tuff types. The minimum cross sectional area should be 1mm although in the case of the detection loops this depends upon the length of the cable and the number and type of devices fitted. Loop length calculators for various cable types are available for both Hochiki and Apollo protocol systems. Drain wires of any field wiring should be maintained throughout the length of the cable and terminated at the panel via brass cable glands. Refer to Section 4.1 for loop earth termination requirements.

22.2. Sounder Load

Panel Sounder - Two 24 volt sounder circuits, each fused with a 1.0A self-resetting electronic fuse. Each sounder circuit is monitored using reverse polarity and a 10k ohm end of line resistor.
Loop sounders – each loop is capable of delivering up to 400mA for devices and loop sounders & beacons.

The total monitored output load (loop & panel sounders, & aux 24V output) must not exceed 2.5 Amps.

22.3. Current consumption

1 loop panel current consumption	130mA (power fault) 300mA in alarm (no alarm load)
2 loop panel current consumption	195mA (power fault) 370mA in alarm (no alarm load)
Modem current consumption	50mA
Network card current consumption	60mA
I/O board current consumption	20mA (quiescent), up to 1A in full alarm
8 way relay card current consumption	10mA (quiescent), 250mA in full alarm
6 way sounder card current consumption	30mA (quiescent), 260mA in full alarm + sounder load
4 way zone board current consumption	70mA (quiescent), 250mA in full alarm

22.4. Power supply –

Supply Voltage	230V AC nominal (+10% / 15%)
Supply rating	3 Amps.
Battery Charger	Charges up to 9Ah sealed lead acid batteries with temperature compensation over the range -5 to +50 degrees Celsius.
Battery Type	Two 12V sealed lead acid 9Ah maximum
Output current split	Battery 1 Amp max, load 2 Amps min.
Battery low indication	21V,
Earth fault indication	< 30Kohms +28V or 0V to earth.

22.5. Field devices

Hochiki	127 devices per loop- ESP protocol
Apollo	126 devices per loop - S90, XP95, Xplorer and Discovery ranges.
Per 1 loop panel	127 Hochiki ESP devices, 126 Apollo devices.
Per 2 loop panel	254 Hochiki ESP devices, 252 Apollo devices.
Sub-address total	800 addresses and sub-address limit per panel.

22.6 Fire / Alarm / Fault Relay ratings (see also Section 13)

All panel relay contacts are rated at 30V DC and 1 Amp maximum.
Under no circumstances should voltages or currents outside of these limits be connected.

22.7 Zones

Some models have 16 zonal LED indicators fitted. Any device can be configured to any one of 500 zones available across all panels on the network.
Care should be taken to ensure that no more than 32 devices will affected by a single short or break in any detection circuit.

22.8 Networking

Up 64 control panels can be connected together using an RS485 type cable with a maximum distance (without boosters) of 1.2Km between alternate cable segments. An additional network PCB is required in each panel to achieve this.
Repeaters (full functional and display only) each take a single address from the 64 available network addresses.

Refer to Networking Manual MAN-1058 for more details.

22.9 Remote Control Inputs (see also Section 16)

Unmonitored digital inputs, activated when connected to the Remote Control 0V terminal with an in line resistance of less than 50 ohms.

Note: Remote control inputs must be restricted by the Access level requirements of EN54-2. Therefore it should not be possible to remotely reset, silence or operate the alarm devices without some means of gaining access to this function.

22.10 Auxiliary 24 Volt monitored output (see also Section 18.1)

Permanent 24 volt output protected by a 500mA self-resetting electronic fuse, monitored for fuse failure.

22.11 Fuse ratings

All panel power supplies, monitored outputs and auxiliary power outputs are protected by non-serviceable self resetting electronic fuses.

Detection circuits are protected using digital current monitoring circuits and FET switching techniques.

The Syncro ASM panel has a serviceable fuse to protect the incoming mains supply. This fuse is a T1.6A 250HRC 20mm type and must be replaced with a fuse of the same type only.

The battery supply is protected by a 3.15A, 20mm glass fuse (F4) mounted on the reverse of the circuit board. This fuse must only be replaced with one of the same type.

23. Additional features

23.1. Loop Data Test

The data signalling between the control panel and detection devices has some level of data error checking built into the protocol. The purpose of this data checking is to ensure that any spurious signals received by the control panel are not incorrectly interpreted as fire signals, thus avoiding an unwanted activation. Information received at the control panel that is not exactly as it is expected to be is known as bad data.

There are a number of sources of signalling errors. The most common is due to electrical interference resulting in current spikes induced on the detection circuit. Other possible causes are poor loop wiring connections, earth leakage between loops, cross- talk between circuits, defective devices installed on the detection circuit and incorrect devices connected on the detection circuit.
Excessive loop resistance is the cause of many bad data faults. These tend to be from devices located nearest the Loop In terminals. If loop resistance is suspected, swap the loop in and loop out cables and see if the bad data faults start occurring from devices fitted at the other end of the loop.
Also excessive Loop Sounder Current will cause bad data faults to occur when the sounders are operated

In general, the user is unaware of problems on the detection circuit, as the panel has some “software filtering” built in, to reject invalid data returned from devices. However, if a single devices returns invalid data on four consecutive polls, the panel will report a bad data fault for that device. If a single device returns invalid data for three polls, followed by a single good poll, then the panel will report no faults for that device.

The purpose of the system diagnostics facility is to see what level of invalid data signalling is occurring on the loops, to get a “feel” for the quality of the signalling and to predict any potential problems that may affect the end user.

The diagnostics facility comprises of two counters for each loop. These counters have a maximum value of 9,999,999. There is a “good” counter, which is incremented for every successful detection device poll and a “bad” counter, which is incremented every time there is an error in the signalling when a device is polled.

This good/bad counter selection allows an engineer to see the proportion of bad readings versus good readings, and compare these between loops for a system. From this information, it should be possible to make a judgement on the signalling quality for each detection circuit on any control panel.

To activate the diagnostics, select the Loop Data Test menu option at Access Level 3. This menu will then allow the user to start the testing for each loop in turn. When started, the user may view the good and bad counters, plus the time that the test was started.

At any time it is possible to view the counters or cancel the testing.

When either of the two counters reaches the maximum value, the test for that loop is halted.

23.2. Network Panel Menu Control

When Syncro ASM control panels are connected as a network, it is possible to perform Access 2 Menu commands on remote panels from any panel on the network. This facility is executed by use of an interim “select panel” menu option whenever the Syncro ASM is installed on a networked system.

23.2.1. Network Disablements

On a networked system, select the access 2 menu from any control panel. Move the selection cursor to be next to the Disablements menu option. Press the right arrow navigation key to choose the menu selection.

At this point you will be asked to select which panel you wish to select disablements for. The default panel will be the local panel. Use the up / down arrow navigation keys to scroll through available panels, then press the right arrow navigation key to choose the selected panel.
At this point, the standard disablement menu options will be viewed. **These menu options apply to the selected panel, rather than the local panel.**
When selecting disablements, all options are the same as for a standard panel.

23.2.2. View Device Details on other panels

It is possible to view device details for devices connected on remote panels from any panel on a networked system using the View Devices menu option in the Access 2 menu.
Note: When viewing device details on a remote panel, the scrolling and refresh rate will be slower then for devices on a local panel.

23.2.3. Global System Time

Whenever the system time is set on any panel on the networked system, then all panels will be set to this time. This simplifies the process of changing the time for daylight saving on large networked systems.

23.3. Configuration Transfer over Network

Using Loop Explorer Version 3 or later, it is possible to transfer the configuration to any panel or all panels on the network from a single place. This eliminates the need to go to each control panel in turn to transfer updated configuration files. The write enable switch must be switched on at the target panel before it is possible to transfer a configuration file across the network.

23.4. Contamination Status

The Syncro ASM control panel calibrates all detection devices every 24 hours, at a time specified by the panel configuration settings.

The calibration procedure checks a number of parameters for each device to ensure that the device will meet the performance specification, as defined by the device manufacturer. If any devices fail to meet this calibration procedure, then the device will be announced as a calibration fault and will need to be replaced.

When devices exceed 85% of their calibration fault limits, they are added to the “Contamination Status” log. At this point, the control panel will not report a fault for the device.

The Contamination Status menu option allows the maintenance engineer to view these devices, to replace them and therefore prevent contamination faults between service calls.

This menu option is available across panels on a networked system, allowing the contamination status for any panel to be viewed from any panel.

23.5. Analogue value transfer

If a connection to the Syncro ASM panel is made using the “Connect” screen of Loop Explorer Version 3 (or later), it is possible to transfer the analogue levels, zero calibration and fire calibrations points for each detection device to the PC.

Using Loop Explorer, it is possible to save this information into a Comma Separated Values (csv) file format for later analysis.

Appendix A – EN54 Configuration Requirements

In order to meet the requirements of EN54, the panel must be configured with the settings stated below.

References refer to EN54 Part 2 1997 clause numbers.

Section 7 – Fire Alarm Condition

Section 7.1.4
Input delay must be set to zero for all manual call points. Call points must not be configured to any event type other than Fire.

Section 7.2.c / 7.4 / 8.2.1.c / 8.6
The panel buzzer must be enabled. The system disablements menu option must not be used.

Section 7.6.1
The internal "Reset" remote control input must be configured so that it is only available at Access level 2, by use of a key input or some other access restriction.

Section 7.8
If the panel sounder circuits are to be used to meet the requirement of "transmission of fire alarm signals to fire alarm devices", then the Def Ring, Silence and Evacuate properties must be selected. The sounder circuits must also be mapped to Zone 0.

Section 7.9
The fire routing output must be set to Zone 0 and to respond to Def Ring mode only.

Section 7.11
Care must be taken when configuring outputs with a combination of delays to some outputs and no-delays to other outputs.

To start the Stage two delay, the Silence Alarm / Acknowledge button must be pressed during the Stage one delay period. If outputs elsewhere on the system are configured with no output delays and are also configured as silenceable, then these outputs will be silenced when the stage one delay is acknowledged.

Section 7.11.a
To select delays to outputs at access level 3, use the Edit Configuration / Edit Panel I/O / Panel Outputs to select the sounder outputs. Select the output and configure the 1st stage delay to the required amount.

Section 7.11.d
All call points must be configured with the "Bypass delay" attribute set.

Section 7.12.3 – Type C Dependency Programming

In order to meet the EN54-2 requirements for Type C Dependency Programming, the following cause and effects is required to configure a particular zone for Type C Dependency.

- The cause and effect has all detection devices and/or call points in the required zone selected (by address) and the 'COINCIDENCE' logical operator used to switch the required outputs in the effect screen.
- An alternative to the above is to use a cause and effect with the zone selected and with the "coincidence by zone – any two in zone" logical operator. The option to "exclude call points" is provided.
- All outputs controlled by the above cause and effect must have the Def Ring output flag deselected to ensure compliance

Section 8 – Fault Warning Condition

Section 8.2.4.c
Earth fault monitoring must be enabled. The system disablements menu option must not be used.

Section 8.8
The fault relay output must be configured to respond only to fault events.

Section 9 – Disabled Condition

Section 9.1.2
If a disablement input type is used as the cause a disablement cause and effect, this input must be configured so that it is only available at Access level 2, by use of a key input or some other access restriction.

Section 9.1.4
If a disablement input is used as a cause for a disablement cause and effect, this input must be configured to be non-latching and should not reset when the system reset is selected. It can only be cleared by a manual action at access level 2.

Section 10 – Test Condition

Section 10.1.b
If a test input type is used as the cause in a test mode cause and effect, this input must be configured so that it is only available at Access level 2, by use of a key input or some other access restriction. This input must be configured as non-latching and can only be cleared by a manual operation at access level 2.

Section 12.5 – Integrity of Transmission Paths

Section 12.5.2
A short circuit isolator must be fitted to the detection circuit at a maximum interval of 32 detection devices and manual call points.

Section 12.6 – Accessibility of indications and controls

Section 12.6.6
The panel door must be locked and the key removed.

Appendix B – IMO FSS code Configuration Requirements

In order to meet the requirements of IMO FSS code, the panel must be configured with the settings stated below.

IMO FSS code Section 2.1.1 – Manually operated call points shall not be configured with a delay upon operation.

IMO FSS code Section 2.1.4.2 – Arrangements shall be made to enable the initial configuration of the system to be restored. This can be achieved by making a copy of the configuration file and configuration software available to service personnel.

IMO FSS code Section 2.5.1 – All sounders shall be configured with 2 minute first and second stage delays See section 11 of this manual.

EU Declaration of Conformity

We hereby declare that the Product listed below complies and fulfils all the relevant provisions of the following directive:

Marine Equipment Directive 2014/90/EU
Low Voltage Directive 2014/35/EU
EMC Directive 2014/30/EU

Product identification:
SYNCRO ASM – Fire detection and fire alarm panel

Type;
MA80161M2, MA80162M2, MH80161M2, MH80162M2

Manufacturer;
Kentec Electronics Limited
Units 25-27 Fawkes Avenue
Questor
Dartford
Kent
DA1 1JQ,
UK

The Product has been designed and manufactured in accordance with the following standards:

EN 54-2:1998, EN54-4:1998, EN60950-1:2006, EN50130-4:1996+A1:1998+A2:2003, EN61000-6-4:2001, EN61000-3-2:2000, EN61000-3-3:1995+A1:2001

The notified body BSI (0086) Kitemark House, Maylands Ave, Hemel Hempstead HP2 4SQ performed type testing of the product and issued the EC Type Examination Certificate Number: BSI/A.1/3.51/550734 and EC Production Quality Assurance Certificate module D BSI/MED/PC/550735. The product's technical file is held by Kentec Electronics Ltd DA1 1JQ

This declaration of conformity is issued under the sole responsibility of the manufacturer.
Signed for and on behalf of the manufacturer by;

Signed ;

Ray French
Director of R&D
Dartford
03/02/2017

www.acornfiresecurity.com

www.acornfiresecurity.com